Bonneagar Iompair Éireann
Transport Infrastructure Ireland

TII Publications

GE PE DN CC OP AM RE

Waterproofing and Surfacing of Concrete Bridge Decks

DN-STR-03009
April 2019

DN Design

Standards

About TII

Transport Infrastructure Ireland (TII) is responsible for managing and improving the country's national road and light rail networks.

About TII Publications

TII maintains an online suite of technical publications, which is managed through the TII Publications website. The contents of TII Publications is clearly split into 'Standards' and 'Technical' documentation. All documentation for implementation on TII schemes is collectively referred to as TII Publications (Standards), and all other documentation within the system is collectively referred to as TII Publications (Technical).

Document Attributes

Each document within TII Publications has a range of attributes associated with it, which allows for efficient access and retrieval of the document from the website. These attributes are also contained on the inside cover of each current document, for reference.

TII Publication Title	*Waterproofing and Surfacing of Concrete Bridge Decks*
TII Publication Number	*DN-STR-03009*

Activity	*Design (DN)*		**Document Set**	*Standards*
Stream	*Structures (STR)*		**Publication Date**	*April 2019*
Document Number	*03009*		**Historical Reference**	**BD 47**

TII Publications Website

This document is part of the TII publications system all of which is available free of charge at *http://www.tiipublications.ie*. For more information on the TII Publications system or to access further TII Publications documentation, please refer to the TII Publications website.

TII Authorisation and Contact Details

This document has been authorised by the Director of Professional Services, Transport Infrastructure Ireland. For any further guidance on the TII Publications system, please contact the following:

Contact: Standards and Research Section, Transport Infrastructure Ireland
Postal Address: Parkgate Business Centre, Parkgate Street, Dublin 8, D08 DK10
Telephone: +353 1 646 3600
Email: infoPUBS@tii.ie

TII Publications

Activity:	Design (DN)
Stream:	Structures (STR)
TII Publication Title:	Waterproofing and Surfacing of Concrete Bridge Decks
TII Publication Number:	DN-STR-03009
Publication Date:	April 2019
Set:	Standards

Contents

Updates to TII Publications resulting in changes to

Waterproofing and Surfacing of Concrete Bridge Decks DN-STR-03009

Date: April 2019

Page No:

Section No:

Amendment Details:

This document supersedes the December 2000 publication of DN-STR-03009. The following principal amendments have been incorporated into this document:

a) The document has been re-formatted in line with the current TII Standards.

b) Spray applied waterproofing is stated as the required form of waterproofing – sheet membranes are not compliant with this Standard and references to sheet membranes have been removed throughout the document.

c) Requirements in relation to Health & Safety are to be included in Appendix 1/23.

d) Areas requiring waterproofing systems are defined in DN-STR-03012 which is cross-referenced in this Specification.

e) Paragraph 2.3 – requirements for waterproofing pedestrian bridges have been included.

f) General requirements for drainage have been removed as these are covered in DN-STR-03012.

g) Paragraph 3.1 – requirements for surface water drainage have been updated.

h) Paragraph 3.2 – requirements for sub-surface drainage have been updated and guidance on drain types and placement has been included.

i) Paragraph 4.1 – requirements for chases has been removed, associated figures updated and references to chases throughout the document removed.

j) Paragraph 5.1 – grit blasting has been recommended as the appropriate means of surface preparation and pressure washing is not recommended.

k) Paragraph 5.2 – a paragraph has been included on requirements of curing membranes.

l) Paragraph 5.3 – requirements of concrete repair materials has been added. Reference has been included to CC-SPW-02000.

m) Paragraph 6 – requirement for a site procedure trial has been included.

n) Paragraph 7.2 – a minimum value for tensile bond strength of the waterproofing system has been included.

o) Paragraph 8 – requirements for Additional Protective Layers (APL) have been updated. Laying of an APL of sand asphalt by hand is strongly discouraged.

p) Paragraph 9 – requirements for surfacing on carriageways and pedestrian bridges has been updated. A Class 2 deformation resistance is now required of all binder course layers overlaying the waterproofing system.

q) Paragraph 9.2 – a site procedure trial may now be required to establish satisfactory adhesion between APL/Surfacing and the waterproofing system.

r) Paragraph 9.3 – requirements for maintenance re-surfacing has been updated.

s) Paragraph 10 – the title has been changed to “Make-up and Surfacing of Footways, Central Reserves and Raised Verges”. Requirements have been revised and references to Standard Construction Details have been included.

Contents Table

1. Introduction

1.1 General

Concrete decks of road bridges are protected to prevent surface water from coming into contact with the structure. This is achieved through the provision of adequate drainage and by waterproofing the upper surface of the deck. Such waterproofing must be sufficiently robust to resist transient vehicular loading, maintain good adhesion to the deck and the surfacing, be resistant to de-icing salts and possess long term durability.

Bituminous road surfacing materials are not sufficiently waterproof to protect bridge decks. Satisfactory waterproofing is achieved by applying a proprietary spray applied waterproofing membrane on to the structural concrete.

The appropriate design life of the waterproofing system shall be in accordance with DN-STR-03012.

In relation to Health & Safety, where specific restrictions, protection or monitoring is considered necessary to protect the public and others then these should be specified in Appendix 1/23, refer to Notes for Guidance on the Specification for Road Works Series NG 100 – Preliminaries (CC-GSW-00100) for further guidance.

1.2 Certification and Registration Requirements

Waterproofing systems are required to have a National Standards Authority of Ireland (NSAI) Agrément Certificate or equivalent before they may be installed on concrete bridge decks constructed, improved, or maintained in compliance with the TII Publications (Standards).

1.3 Implementation

This Standard should be used forthwith on all schemes for the construction and/or improvement of national roads. The Standard should be applied to the design of schemes already being prepared unless, in the opinion of TII, the application would result in significant additional expense or delay to progress. In such cases, Design Organisations should confirm the application of this Standard to particular schemes with TII.

1.4 Definitions

For this Standard, the following definitions shall apply:

i. **Waterproofing system:** A material or combination of materials which form an impervious membrane, including where appropriate a protective layer, for ordered application to a bridge deck to protect it from the ingress of water and de-icing salts.

ii. **Permitted Waterproofing System (PWS):** A waterproofing system which is in accordance with the requirements and conditions of this Standard.

iii. **Protective layer:** Material forming part of a Permitted Waterproofing System laid on the waterproofing membrane to protect it from damage during construction.

iv. **Additional Protective Layer (APL):** Bituminous material complying with the Specification for Road Works Series 2000 – Waterproofing for Concrete Structures (CC-SPW-02000) laid on specified areas of the complete waterproofing system to protect it from damage during construction, surfacing and resurfacing operations.

v. **Surfacing:** Road, footway, central reserve and verge surface course or combination of surface course and binder course.

vi. **Sub-surface drainage:** A system for draining water from within the surfacing.

vii. **Specification:** Specification for Works within TII Publications (Standards).

2. Scope

2.1 General

This Standard specifies the requirements for waterproofing and surfacing concrete bridge decks and shall apply generally to new works and where appropriate to the maintenance and repair of existing works. It describes the design and certification requirements for spray applied waterproofing systems for use on concrete decks of road bridges.

Bridge deck waterproofing shall be applied to parts of the structure as defined in DN-STR-03012 Design for Durability. Other forms of waterproofing and protective membranes (such as epoxy resin or hydrophobic pore liner) are not described in this Standard. Reference should be made to CC-SPW-02000 & DN-STR-03012 for further guidance on the application of these systems.

For the purpose of this Standard, concrete bridges are deemed to include underbridges and overbridges together with pedestrian bridges, tunnels, box type underpasses, arches and culverts except when such structures are constructed by thrust boring or tunnel techniques where the external faces are inaccessible for the application of waterproofing. In such cases reference should be made to the appropriate Overseeing Organisation.

Concrete pipes with a diameter greater than 2m shall be treated with two coats of epoxy resin waterproofing for buried concrete surfaces in accordance with CC-SPW-02000.

2.2 Steel Decks

Requirements for the waterproofing and surfacing of steel decks are not included in this Standard and the treatment of such decks shall be considered individually for each case using the most appropriate techniques available at the time and agreed with TII.

2.3 Pedestrian Bridges

The requirements for the waterproofing of concrete decks at pedestrian bridges with asphalt surfacing are the same as the requirements given in this document.

For pedestrian bridges with surfacing less than 100mm thickness, the waterproofing system shall be compatible with this reduced thickness and shall be certified as such in accordance with the requirements of Section 1.

2.4 Aqueducts

The waterproofing of aqueducts is not within the scope of this Standard, and the treatment of such structures shall be considered individually for each case using the most appropriate techniques available at the time and agreed with the relevant Authority, except where the top of the aqueduct is over-slabbed and carries a road, in which case the top slab is considered as a bridge deck.

3. Drainage

3.1 Surface Water Drainage

All bridge decks shall be provided with an adequate surface water drainage system.

Surface water shall be removed from the bridge deck by the provision of falls and suitable drainage outlets, continuous drainage channels etc. Where side inlet gullies are used, a continuous run of gullies shall be provided over the whole length of the bridge deck.

Longitudinal gradients should be a minimum of 1 in 100. The removal of surface water may be improved by means of:

i. Local falls in the channels or hard shoulders between closely spaced gullies
ii. A continuous drainage channel

Refer to DN-STR-03012 Design for Durability for the drainage requirements to structures. Guidance on the hydraulic design and spacing of road gullies is given in DN-DNG-03022 Drainage Systems for National Roads (including Amendment No. 1 dated June 2015) & DN-DNG-03067 Spacing of Road Gullies (including Amendment No. 1 dated June 2015). Drainage outlets should intercept surface water and wherever possible be positioned adjacent to the deck joints. There may be no need for gullies on short span bridges.

3.2 Sub-surface Drainage

Bituminous surfacing is water permeable and there should be falls and outlets to allow this water to drain away. Where the geometry of the deck or deck movement joints prevents this water from draining naturally through surface drainage, sub-surface drainage consisting of horizontal perforated tubes or vertical pipe drains or other means shall be provided at the level of the waterproofing system at all locations where water can accumulate.

Where pipe drains are used, these shall be a minimum of 40mm internal diameter to avoid becoming blocked.

Edge drains shall be provided to drain the full depth of relatively permeable surface courses:

i. At the low points of the deck
ii. Where the flow of sub-surface water through the surface course is impeded, e.g. at expansion joints that are not the buried type

The position of the outlets of sub-surface drainage pipes should be such that any discharge will not harm other parts of the structure or provide a hazard to traffic or pedestrians. It is possible in freezing conditions for icicles to form from the drainage outlets.

A place where water is likely to be trapped is at a deck movement joint on a low section of deck, which forms a barrier to the natural drainage from the surfacing. Reference should be made to DN-STR-03006 Expansion Joints for Use in Highway bridge Decks for methods of dealing with this situation.

3.3 Drainage of Service Bays and Ducts

All service bays shall have provision for drainage. Wherever possible service bays shall be left unfilled. If a statutory undertaker requires a filling to be used it shall be a free draining material as described in Section 3.4 Where surface or sub-surface water flows towards a bridge from the approaches suitable upstands and drainage outlets shall be provided to prevent water entering the service bays and leaking into expansion joints. Outlets to service bays shall also be in accordance with Section 3.2.

3.4 Make-up Materials for Footways, Central Reserves and Verges

Wherever possible make-up material of either no-fines concrete or other free draining materials or concrete shall be used over the waterproofing.

Where loose filling is required it should be a material such as 10mm nominal single size aggregate rather than sand.

Sub-surface drainage shall be provided.

3.5 Access Chambers

Separate access chambers shall be provided at each end of each structure for drainage and service ducts and shall curtail the passage of water along ducts. Each chamber shall be suitably drained and covers and frames for access chambers shall comply with the following:

i. Conform with Class D400 or Class B125 to IS EN 124;
ii. Have a strength class appropriate to their location in accordance with IS EN 124;
iii. Be watertight;
iv. Be located to take account of parapet and safety barrier post locations.

4. Detailing of Deck Waterproofing

4.1 General

Attention given to deck detailing during design will assist in ensuring the effectiveness of the waterproofing. The waterproofing shall be continuous and cover the entire deck between parapet upstands including beneath footways, central reserves, verges, service bays and under kerbs (see Figure 4-1). On bridges with separate superstructures each deck shall be waterproofed independently. Particular attention is to be paid to sealing the waterproofing membrane at its edges and around interruptions such as gullies.

Internal angles and sharp arrises should be avoided in the deck surface to be waterproofed.

Fillets should be formed in sharp internal angles (see Figure 4-2). Spray applied coatings tend not to enter right into the angle but to build up thickness on the adjacent margins resulting in a line of thinning of the membrane in the angle. Spraying technique, material rheology and equipment should also be selected to avoid this fault.

Arrises should be chamfered or rounded as sharp edges may cut into the membrane and liquid applied membranes have a tendency to draw away from sharp arrises resulting in local thinning of the membrane (see Figure 4-3). In these cases a stripe coat may be necessary to maintain the specified minimum membrane thickness.

4.2 Deck Movement Joints

At all movement joints in the deck the waterproofing shall be detailed in such a way to prevent water percolating beneath the waterproofing membrane.

At sealed joints, it is essential that the waterproofing membrane, the relevant parts of the joint and any sealing material form a continuous impervious barrier. Impervious materials, e.g. epoxy resin mortar, are to be bonded directly to the deck.

The detailing of waterproofing at deck movement joints including buried joints is given in DN-STR-03006

4.3 Service Bays

All service bays shall be waterproofed on sides and floor and the system shall generally be the same as for the deck. Waterproofing on the floor of service bays shall always be protected (see Section 8.1). For service bay drainage see Section 3.3.

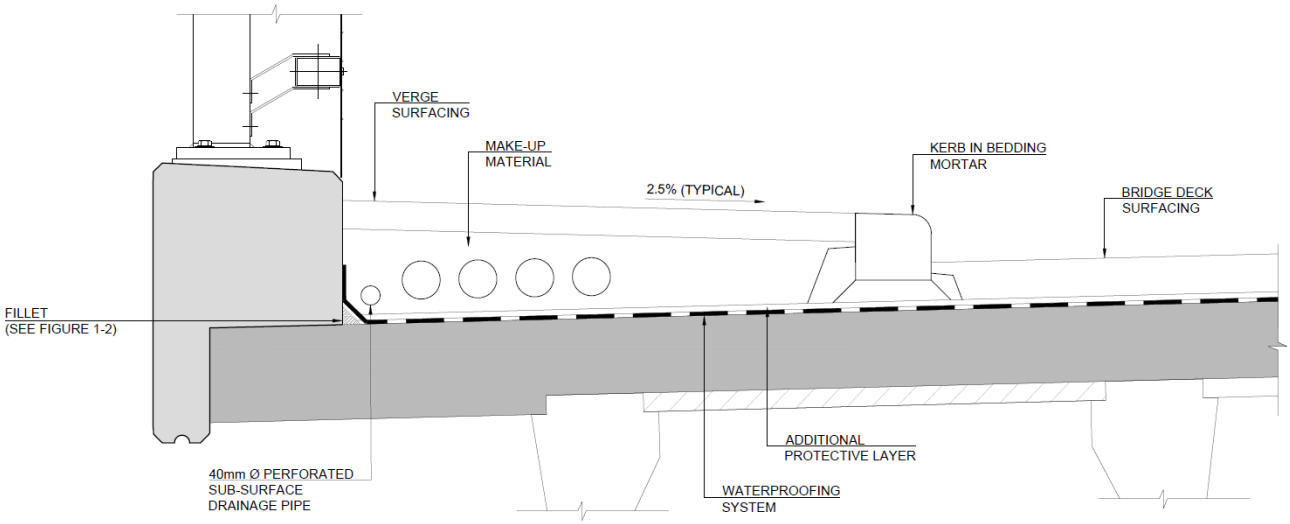

Figure 4-1 Typical details of waterproofing systems

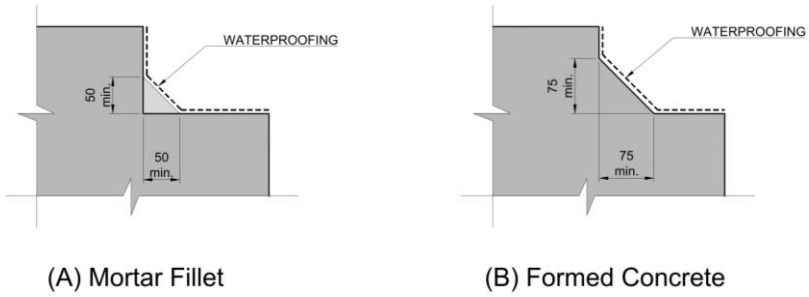

Figure 4-2 Typical fillet details

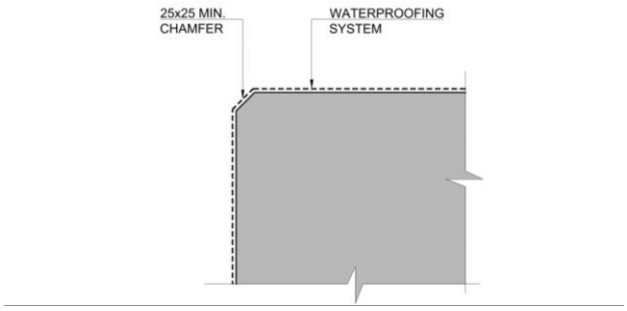

Figure 4-3 Typical chamfer details

5. Concrete Deck Construction

5.1 Surface Finish

All un-formed concrete surfaces which are to receive bridge deck waterproofing shall be Class U4 in accordance with the Specification for Road Works Series 1700 – Structural Concrete (CC-SPW-01700). Where the surface does not meet Class U4, repair work shall be undertaken to achieve this class.

Formed surfaces shall be grit blasted to provide a lightly textured finish equivalent to a U4, with the exception of buried or non-trafficked formed surfaces which shall be prepared to the satisfaction of the approved installer responsible for the application of the system and provided the minimum tensile bond strength in Section 7.2 is achieved.

Freedom from laitance is essential to obtain sound adhesion of the waterproofing membrane to the deck. Grit blasting is recommended as an appropriate means of surface preparation. Pressure washing is generally not recommended as additional time must be allowed for this water to evaporate from the concrete substrate.

Refer to CC-SPW-02000 for further requirements.

5.2 Curing Membranes

The use of curing liquids, compounds and membranes can adversely affect the adhesion of the waterproofing system to the concrete deck - refer to CC-SPW-02000 for restrictions on their use.

5.3 Concrete Repairs

Concrete repair materials should be compatible with the waterproofing system and have similar properties to the deck concrete (strength, coefficient of thermal expansion and elastic modulus). Repair materials less than 5mm thick should be avoided as they are more likely to de-bond and should only be used if a durable bond can be demonstrated.

Refer to Section 2.3 of CC-SPW-02000 for further concrete repair requirements.

6. Waterproofing Systems

Procedures to enable the use of waterproofing systems in road contracts are given in Appendix A of this Standard. Requirements, tests and checks for Permitted Waterproofing Systems are given in Appendix B of this Standard, and requirements for Certification site trials are given in Appendix C.

The use of a Permitted Waterproofing System does not negate the need to ensure adhesion compatibility with the concrete and the surfacing.

The selection of Permitted Waterproofing Systems for use on road bridge decks does not in itself give automatic assurance that those systems will adhere adequately to the concrete. Site testing is required as described in CC-SPW-02000.

Where during a site procedure trial the adhesion is found to be unsatisfactory it is likely to be due to incompatibility at the concrete/primer interface.

7. Installation and Workmanship

7.1 General

The installation of the waterproofing system shall be in accordance with this Standard, CC-SPW-02000 and the requirements specified in the NSAI Agrément Certificate or equivalent for the particular system. The integrity of the installed system shall be demonstrated by non-destructive testing in accordance with CC-SPW-02000.

7.2 Bond

Uniform adhesion is essential at all interfaces i.e. concrete/primer/waterproofing membrane/tack coat/ additional protective layer/surfacing in order to ensure durability of the concrete deck, waterproofing system and the surfacing. Adhesion failure will permit water with de-icing salts and contaminants to press under the membrane thus negating the effectiveness of the waterproofing system. In addition, the de-bonded interface may lead to the local disruption of the surfacing and the formation of potholes.

The adhesion between the concrete and the waterproofing system shall be tested on site in accordance with the requirements and procedures given in CC-SPW-02000. A minimum value of tensile bond strength of 0.7 MPa is required for on site testing.

The use of ventilating layers, partial bonding or bond breakers with the waterproofing system shall not be permitted.

7.3 Blisters and Pin/Blow Holes

It is essential that all defects in waterproofing systems such as blisters and pin/blow holes are made good before any subsequent layers/coats are applied.

Details for making good of defects should be included in the NSAI Agrément Certificate or equivalent and the method statement for the particular waterproofing system.

8. Protection of Waterproofing

The protection of bridge deck waterproofing during construction shall be in accordance with CC-SPW-02000.

Protective layers forming part of a waterproofing system shall be incorporated over the whole of the deck area to be waterproofed.

A 20mm nominal thickness Additional Protective Layer (APL) shall be laid as soon as possible on all waterproofed bridge deck areas to protect the waterproofing during subsequent construction operations. Waterproofed vertical faces e.g. upstands and the sides of service bays do not require an APL, and the floor of service bays shall be protected as per Section 8.1. The APL shall be installed strictly in accordance with the manufacturer's certification and instructions.

In specific instances (either maintenance or new works) where there are limitations on the total thickness of the asphaltic material above the waterproofing system, the requirement for the APL may be relaxed at the sole discretion of TII. TII shall be consulted for advice on the choice of suitable waterproofing systems and application made to TII for a departure from Standards to cover this non-standard aspect. In such cases, waterproofing systems meeting the requirements of the Aggregate Indentation Test at 125°C in Appendix B may be considered suitable.

The bituminous material should not exceed 20mm nominal thickness in order to retain stability and it should not be used as a regulating course. The laying of an APL of sand asphalt by hand is typically not permissible except in extreme circumstances where all other methods of laying are not viable. A demonstration of achieving the same standard will be required in this case. This is because of the difficulties of laying and rolling such a thin layer at sufficiently high temperatures to achieve a good bond and form a dense layer.

8.1 Service Bays

Waterproofing on the floor of service bays shall receive protection consisting of 50mm nominal thickness ST1 no-fines concrete to CC-SPW-02600 to prevent damage during future maintenance activities to services and utilities.

9. Surfacing on Carriageways

Bridge decks shall be surfaced with bituminous materials complying with CC-SPW-00900, Series 900, Road Pavements - Bituminous Materials, with the exception of accommodation bridges which may be treated similarly or may be surfaced with concrete. For pedestrian bridges where proprietary or specialist surfacing is required, this shall be compatible with the waterproofing system and subject to approval by TII.

Road surfacing laid over the waterproofing and additional protective layer (APL) consists of binder and surface courses. The surface course thickness on the bridge deck should be as for the road generally. The thickness of the binder course shall be varied to provide the required shaping and profile, with the thickness of the surface course remaining constant.

For new works the designed total minimum thickness of surfacing material shall be 100mm excluding the waterproofing system and APL. On certain accommodation bridges used by farmers concrete surfacing is suitable as it is more easily cleaned after use by cattle. Where concrete surfacing is used, the additional protective layer is not required over the waterproofing system.

The deformation resistance of all binder course layers (and base if applicable) overlaying the waterproofing system shall have a Class 2 deformation resistance in accordance with Table C.3 of PD 6691 Guidance on the use of BS EN 13108, Bituminous mixtures – Material specifications measured using the wheel-tracking test in accordance with CC-SPW-0900.

9.1 Bridge Deck Expansion Joints

Special consideration shall be given to the detail at deck expansion joints where the surfacing thickness may be locally reduced by the design of the deck joint.

9.2 Bonding of APL or Surfacing to the Waterproofing System

The APL or surfacing laid on the waterproofing system shall be uniformly bonded to the system with a compatible tack coat. Where a tack coat for the APL or surfacing is not required as part of the waterproofing system a uniform bond to the membrane shall be obtained from the binder within the directly applied APL or surfacing. Minimum tensile bond strength is given in Section 7.2.

9.3 Maintenance Re-Surfacing on Carriageways

For maintenance works the total minimum thickness may be determined by existing circumstances.

Where the thickness of surfacing to be laid on the waterproofing system is required to be less than 100mm, special surfacing material designed for thin layers may need to be used. In these cases TII should be consulted for advice on the choice of waterproofing system.

Where reduced surfacing thicknesses are used it may not be possible to use road studs of the anchored type.

10. Make-up and Surfacing of Footways, Central Reserves and Raised Verges

The surfaces of raised verges and footpaths on concrete road bridges shall be concrete with a minimum thickness of 75mm, typically applied to a stable make-up material such as concrete or no-fines concrete. The typical arrangement is shown in Figure 10-1.

The surfaces of footways, central reserves and raised verges shall be laid to falls such that surface water will be shed into the drainage system.

Raised verge construction across bridge decks shall continue to the end of any wingwalls, retaining walls or return walls which shall be parallel to the carriageway and adjacent to the structure. Where the raised verge is a footpath this shall continue either to the end of the wingwall or 20m, whichever is longer.

For further requirements refer to CC-SPW-01100.

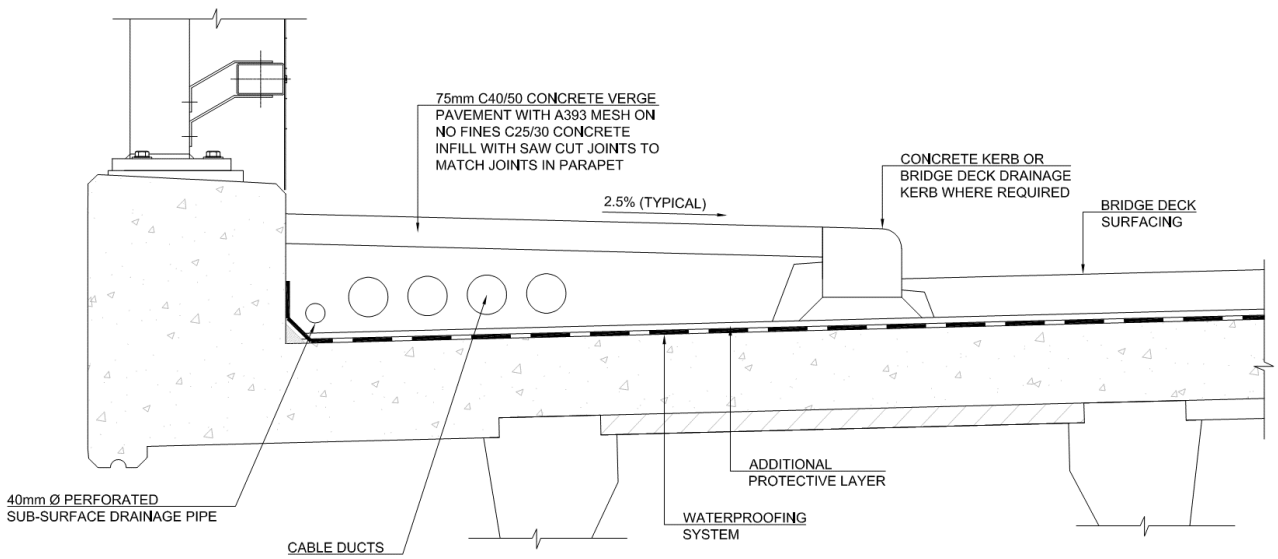

Figure 10-1 Typical raised verge detail

11. References

11.1 TII Publications (Standards) References

CC-GSW-00100 - Notes for Guidance on the Specification for Road Works Series NG 100 - Preliminaries

CC-SPW-02000 - Specification for Road Works Series 2000 - Waterproofing for Concrete Structures

DN-DNG-03022 - Drainage Systems for National Roads (including Amendment No. 1 dated June 2015)

DN-DNG-03067 - Spacing of Road Gullies (including Amendment No. 1 dated June 2015)

CC-SPW-02600 - Specification for Road Works Series 2600 - Miscellaneous

CC-SPW-00900 - Specification for Road Works Series 900 - Road Pavements - Bituminous Materials

DN-STR-03006 - Expansion Joints for Use in Highway Bridge Decks

DN-STR-03012 - Design for Durability

11.2 References to IS/EN/BS Standards

IS EN 13108 - Bituminous mixtures

IS EN 124: Gully tops and manhole tops for vehicular and pedestrian areas

PD 6691 - Guidance on the use of BS EN 13108, Bituminous mixtures – Material specifications

Appendix A:

Procedures to enable the use of Waterproofing Systems in Road Contracts

A1. A waterproofing system is permitted for use in road works provided that

a) It has a NSAI Agrément Certificate or equivalent showing compliance with current TII requirements (see Appendix B) and

b) TII has not suspended use of the system.

A2. It is for the manufacturer or their representative to obtain a NSAI Agrément Certificate or equivalent for their particular system.

A3. To be awarded a NSAI Agrément Certificate or equivalent the waterproofing system is subjected to laboratory testing and checking for compliance with TII requirements by NSAI or a NSAI/TII approved Test Laboratory or an equivalent. The laboratory results are assessed by NSAI or an equivalent body and if acceptable the system is subjected to a site trial on an actual bridge deck.

A4. Detailed requirements for the site trial are given in Appendix C.

A5. When the assessment by NSAI or an equivalent body of both the laboratory testing and checking and the site trial show the system to be acceptable NSAI or an equivalent body award an Agrément Certificate or equivalent and the system is permitted for use in road works.

A6. If at some subsequent time the system shows itself to be unsatisfactory by failing to maintain its Certification requirements, TII reserve the right to suspend or remove permission for the system to be used in road works notwithstanding the validity of the NSAI Agrément Certificate or equivalent.

Appendix B:

CERTIFICATION TEST REQUIREMENTS FOR WATERPROOFING SYSTEMS ON CONCRETE BRIDGE DECKS

B1. Introduction

B1.1. This Appendix gives a series of test requirements for the Certification of waterproofing systems for concrete bridge decks. The Certification procedure has been designed so that the manufacturer or their representative has the option of withdrawing from the test programme at various stages if the National Standards Authority of Ireland (NSAI) or an equivalent body finds the system submitted fails to comply with the requirements.

B1.2. TII reserves the right to amend or supplement the tests required for NSAI or equivalent Certification. The costs of additional tests will be the responsibility of the manufacturer or their representative.

B1.3. Certification shall be given only if the waterproofing system successfully passes the complete test programme and site trial. TII reserves the right to suspend or remove permission for the systems to be used in road works for TII for any system which fails to maintain the test requirements in service.

B2. Procedure

The procedure for Certification is divided into the following stages:

i) Application for assessment
ii) Provision of unbonded membranes for testing
iii) Provision of systems bonded to concrete for testing
iv) Provision of a site trial on an actual bridge deck

The manufacturer may withdraw from the remainder of the test programme at the completion of any of these stages.

B2.1. Application for Assessment

Manufacturers requiring a waterproofing system to be assessed shall submit the following basic details of their waterproofing system to the NSAI or equivalent body.

For All Systems:

1) System name
2) Description of Materials
3) Storage requirements
4) Installation Method Statement
5) Repair techniques
6) On site integrity testing by non-destructive testing
7) (NDT) method(s)

8) Expected Service Life
9) Health and Safety Data Sheets
10) Mixing time of components
11) Pot life of mixed liquid materials
12) Nominal coverage rates
13) Setting time Cured/dry density
14) Mix details
15) Dry film minimum/maximum thickness (Note. TII requirement for 2mm minimum thickness: see paragraph C12)

Where Applicable:

- Concrete surface preparation
- Type of primer
- Type of adhesive and application temperature
- Number of layers/coats
- Type of protection
- Type of tack coat for bituminous overlay
- Minimum activation temperature of system or tack coat
- Other details

B2.2 Unbonded (As Received) Membranes

It is necessary for unbonded cured/dry film samples of liquid applied membranes (prepared by the manufacturer or their representative in the presence of the NSAI or equivalent body) to be submitted for the test programme.

The samples shall consist of free film to cover 5 square metres minimum size 1m x 1m.

In addition, following a successful outcome to checks and basic tests by the NSAI or equivalent body (B3.1 and B3.2), membranes/systems bonded to concrete (prepared by the manufacturer or their representative in the presence of the NSAI or equivalent body) will be required for B3.3 and B4.2.

B2.3 Preparation of Bonded Systems

Preparation of Concrete Test Blocks

Three sizes of concrete test blocks are to be used for the bonded membrane tests.

a) (170 x 170 x 55) mm
b) (300 x 300 x 55) mm
c) (400 x 220 x 55) mm with crack inducer - see Fig 1

The tolerance on block dimensions shall be ±3mm.

Portland Cement to IS EN 197-1 shall be used with mix proportions by weight 1 : 2 : 3.5 (cement : sand : aggregate) using 20mm gravel aggregate for Blocks A and B and 10mm gravel aggregate for Blocks C in accordance with IS EN 12620 and having a water: cement ratio of 0.5 maximum. The surface to which the membrane is to be bonded shall have a U4 finish in accordance with CC-SPW-01700.

All blocks shall be cured and thoroughly dry before use. A suitable curing regime is:

1) Demould after 24 hours.
2) Store under wet hessian and polythene sheet at normal ambient room conditions for 6 days.
3) Store uncovered at normal ambient room conditions for at least 21 days.

With NSAI or an equivalent body in attendance samples of the waterproofing membrane/system are to be bonded to the blocks by the manufacturer or their representative.

The following minimum number of blocks are required to test one waterproofing system:

72 size (A) blocks

12 size (B) blocks

9 size (C) blocks with crack inducers

For systems using a separate bonding agent (e.g. those using oxidised bitumen adhesive or similar), the adhesive is to be omitted from a central circular area of 120mm diameter for selected tests (see B3). This is in order that the system may be tested without the influence of the adhesive. For this requirement size (A) blocks shall be used. The system is bonded around the periphery only of the block, leaving the central area unbonded.

B2.4 Site Trial

Following the successful results of the laboratory test programme (see B3) the manufacturer or their representative is then required to undertake a site trial (see Appendix C).

B3. Test Programme

The programme of tests and checks is sub-divided as follows (Test Methods are given in B4.):

B3.1 Identification and Quality Control

Identification and quality control tests are to be defined by the NSAI or equivalent body for the purpose of checking manufacturers' submitted data (see B2.1). These control tests will not form part of the Certification but the NSAI or equivalent body will advise the manufacturer on the suitability of the submitted system for continuing with the Certification testing.

The manufacturer may withdraw at this stage.

B3.2 Tests on Film of Liquid Applied Membranes (As Received From Manufacturer)

1) Dimensional check - thickness
2) Weight per unit area
3) Water absorption
4) Resistance to water penetration including penetration through joints etc.
5) Resistance to damage
6) Change in flexibility
7) Dimensional stability

Failure to meet any of the test requirements may result in the NSAI or equivalent body refusing Certification or placing limitations on use.

The manufacturer shall be advised and may withdraw from the remainder of the test programme.

B3.3 Tests on Waterproofing Membranes/Systems Bonded to Concrete

These tests shall be applied to all systems.

Tests and Checks During Installation:

i) Nominal coverage rates of all liquid components of the system.
ii) Setting time of all liquid components of the system under the recorded conditions of installation including temperature and humidity.
iii) Resistance to pin/blow holing.
iv) Effects of moisture on setting time.

Tests After Installation

i) Tensile adhesion test (tat)
ii) Resistance to chloride ion penetration (cip)
iii) Resistance to freeze thaw +(cip) and (tat)
iv) Resistance to heat ageing +(cip) and (tat)
v) Resistance to chisel impact +(cip)
vi) Resistance to aggregate indentation +(cip)
vii) Resistance to thermal shock, heat ageing and crack cycling +(cip)
viii) Surfacing to waterproofing system interface shear adhesion test
ix) Surfacing to waterproofing system interface tensile bond test.

Failure to meet any of the test requirements of this stage may result in the NSAI or equivalent body refusing Certification or placing limitations on use.

The manufacturer shall be advised and may withdraw from the remainder of the test programme.

A copy of the test report shall be lodged by the NSAI or equivalent body with TII who in consultation with the NSAI or equivalent body will confirm whether the assessment may proceed to the site trial.

B3.4 Site Trial Checks and Tests

Prior to installation of the waterproofing system the NSAI or equivalent body shall verify:

i) the suitability and condition of the bridge deck for the site trial including any preparation necessary.

ii) the quality assurance statement of all materials forming the waterproofing system.

During the installation of the waterproofing system and the asphalt surfacing the NSAI or equivalent body shall record the following as applicable:

1) Age of concrete
2) Installation temperature of the system
3) Relative humidity
4) Weather conditions
5) Nominal coverage rates
6) Setting time
7) Thickness applied
8) Pin/blow holing/blistering
9) Bond of the membrane to the concrete bridge deck
10) In situ integrity NDT method(s)
11) Repair procedure
12) Workmanship and supervision
13) Damage to system prior to asphalt surfacing
14) Temperature of asphalt applied
15) Damage caused by asphalt surfacing
16) Bond of the asphalt surfacing to the system

B4. Test Methods

For all tests where the temperatures are (-10 ±2)°C, (+23 ±2)°C and (+40 ±2)°C respectively the RH at 23°C shall be (50 ± 5)% and the actual RH at the other temperatures shall be recorded.

B4.1 Tests on Film of Liquid Applied Membranes (where applicable)

a) Dimensional Checks

Thickness shall be measured to an accuracy of 0.01mm using a micrometer or dial gauge with an 8mm diameter circular foot loaded to exert a pressure of 0.02N/mm^2. 60 measurements shall be made on specimens taken over the central (1 x 1)m, ignoring the edge perimeter width of at least 50mm.

b) Weight per Unit Area

A minimum of three specimens (150 x 150)mm each weighed to an accuracy of 0.01 grammes.

c) Water Absorption

The specimens used for weight measurement shall be immersed in a water bath for 28 days at (23 ±2)°C and then re-weighed after removing the surface water. The increase in weight shall not exceed 7%.

Specimens which exceed this limit shall be subjected to freezing for 24 hours at (-10 ±2)°C. After the freeze period the specimen shall be conditioned for at least 4 hours at (23 ±2)°C and then observed under a minimum of x20 magnification for damage or thickness change.

When compared with a control specimen there shall be no damage.

d) Resistance to Water Penetration

Three specimens of membrane, (250 x 250)mm, are subjected to a water pressure of 0.6 atmospheres over a diameter of 150mm at a test temperature of (23 ±2)°C.

Specimens consisting of maximum 100mm overlaps, and where appropriate butt joints are also tested. The specimens shall be fully supported by a metal gauze sheet. There shall be no water penetration after 28 days.

B4.2 Tests on Waterproofing Systems Bonded to Concrete

a) Resistance to Pin/Blow Holing

Four size (B) concrete blocks are used for this test.

Two size (B) blocks are immersed in water for a minimum of 24 hours, removed and the surface allowed to dry in still air for up to two hours at (23 ±2)°C. The sealer/primer and waterproofing membrane is applied according to the manufacturer's requirements to all four blocks as one or two coats. The samples are observed after two hours for pin/blow holes or blisters. Temperature and RH should be recorded during the test.

There shall be no blisters and not more than four pin/ blow holes continuous or non-continuous within a central area of (250 x 250)mm for both samples. The size of any pin/blow hole present shall be recorded and no pin/blow hole shall exceed 1mm in diameter. The requirement for pin/blow holing applies to single-coat, two or more coat membranes.

Where single coat membranes do not meet the above requirements the manufacturer shall be given the opportunity of applying the membrane as two or more coats to the same total thickness. If then acceptable the system shall be used as a two or more coat membrane and the remainder of the tests shall be as for a two or more coat membrane.

b) Setting of a Liquid Applied Membrane on a Concrete Block with a High Moisture Content

During the pin/blow holing test the setting time of the membrane on the four blocks is also noted. The nominal value for the membrane on the wetted blocks shall be within ±10% of the nominal setting time on the dry blocks, unless the manufacturer specifies differently. If this applies then the time shall accord with the manufacturer's declared limits.

c) Nominal Coverage Rates of all Liquid Components of the System

During preparation of the samples, nominal coverage rates will be confirmed by the manufacturer or their representative.

d) Tensile Adhesion Test

Bond of waterproofing membrane to concrete substrate.

Nine size (A) concrete blocks with membranes fully bonded are to be used for this test i.e. 3 blocks for each test temperature.

On each block, an area of membrane, (100 x 100)mm, is isolated by cutting down to the concrete without disturbance to the membrane. A steel plate, (100 x 100 x 10)mm is bonded to this area with a suitable adhesive. A tensile pull off apparatus that locates onto the surface of the plate is used (e.g. Figure 2).

The loading shall be applied progressively at a rate of (0.4 ±0.2)kN/sec. The test shall be carried out in temperature controlled conditions at (-10 ±2)°C, (23 ±2)°C and (40 ±2)°C respectively. The test samples shall have been preconditioned at the above temperatures for at least 2 hours.

The stress at failure for each individual sample shall be not less than:

0.3 N/mm^2 at (-10 ±2)°C and (23 ±2)°C respectively, and 0.2 N/mm^2 at (40 ±2)°C.

e) Resistance to Chloride Ion Penetration (cip)

Three size (A) concrete blocks are to be used for this test [B3.3(b)(ii)].

For membranes where a separate adhesive is used, the samples for testing for cip alone, together with chisel impact with cip [B3.3(b) (ii) and (v)], shall be unbonded in the central circular 120mm diameter area (see preparation of concrete test blocks B2.3). For all other combined cip tests [B3.3(b)(iii), (iv), (vi) and (vii)], the membranes shall be fully bonded.

Note: For 3.3(b)(iv) size (B) block is required. For 3.3(b)(vii) size (C) block is required.

A glass vessel, 100mm diameter (Figure 3) is sealed with a silicone or similar suitable adhesive to the surface of the membrane.

The vessel is filled with 1.47 litres of saturated sodium chloride solution which makes contact with the membrane surface.

The test is conducted at (23 ±2)°C over a period of 28 days. Water penetration or absorption is detected by a fall in the level of the liquid.

Observations of surface sweating and wicking of salt solution along an interface are made periodically. The solution, vessel and membrane are then removed.

A sample of powdered concrete is taken from the surface of the concrete block using the profile grinding technique. The sample shall be obtained by grinding the surface of the concrete to a depth of 3mm.

Approximately 40 grams of dust shall be collected.

Two representative specimens, approximately 5 grams each, are taken from the sampled dust and analysed for chloride ion concentration.

The average value of the two results obtained from the analysis shall represent the chloride ion concentration for each block.

Salt penetration is determined by measuring the percentage of chloride ions present in the powdered concrete sample. Ion selective electrode method shall be used.

The following requirements shall be met after 28 days.

i) The maximum increase in chloride ion concentration in the concrete shall be not more than 0.04%.

ii) The maximum loss in volume of the liquid in the test vessel shall be less than 20ml.

iii) There shall not be any significant surface sweating.

iv) There shall not be any significant inter-laminar salt penetration.

v) There shall not be any deterioration or debonding of the membrane from the concrete.

f) Resistance to Freeze-Thaw

Six size (A) concrete blocks with the membrane bonded are to be used for this test. Three of the blocks with membrane fully bonded are used for water absorption/ freeze-thaw/tensile adhesion B4.2(d) tests and three blocks with the membrane fully bonded but partially bonded for membranes using a separate adhesive (see B2.3) are for the water absorption/freeze-thaw/chloride ion penetration (B4.2(e)) test. The six samples are subjected to water absorption (using deionised water) for 28 days at (23 ±2)°C using a 100mm diameter vessel and pipe coupling as shown in Figure 4.

Membranes exhibiting up to 7% water absorption determined in B4.1(c) shall be subjected to 6 freeze-thaw cycles. Membranes exhibiting more than 7% water absorption (see paragraph B4.1(c)) shall be subjected to 20 freeze-thaw cycles. Each cycle shall consist of 8 hours freeze at (-10 ±2)°C and 16 hours thaw at (23 ±2)°C. During the thawing period water is introduced into the pipe coupling collar to a depth of approximately 50mm. The water is then removed before commencing the freeze cycle. On completion of the freeze-thaw cycling the samples are conditioned for at least 24 hours at (23 ±2)°C. Three samples are then subjected to the tensile adhesion test (B4.2(d)) and the remaining three samples to the chloride ion test (B4.4(e)). The requirements for both these tests shall apply at (23 ±2)°C.

If there is severe loss of salt solution but no increase in chloride ion concentration in the concrete, further investigation shall be made by the NSAI or equivalent body.

g) Resistance to Heat Ageing

Six size (A) concrete blocks with the membrane fully bonded are to be used for the two aspects of this test.

All samples are placed in a ventilated oven and maintained at (70 ±3)°C for 28 days. These are then conditioned for at least 24 hours at (23 ±2)°C. Three samples are subjected to the chloride ion test (B4.2(e)) and the remaining three samples are subjected to the tensile adhesion test (B4.2(d)). The requirements for both these tests shall apply at (23 ±2)°C.

h) Resistance to Chisel Impact

The membrane bonded to nine size (A) blocks (prepared in accordance with B2.3 and B4.2(e)) are to be used for this test, i.e. 3 blocks for each test temperature. The test shall be carried out in temperature controlled conditions at (-10 ±2)°C, (23 ±2)°C, and (40 ±2)°C respectively. The chisel impact apparatus and the test specimen shall be preconditioned at the respective temperatures for at least 2 hours.

A chisel head 20mm wide with a 90° tip angle and weighing 1.0kg is dropped from a height of 200mm directly onto the central test area of the membrane. The chisel is guided through a linear bearing inside a tube of low thermal conductivity (Figure 5). Five impacts are made within an area delineated by a circle of 75mm diameter.

The chloride ion test (B4.2(e)) at (23 ±2)°C shall then be applied. If one of the three samples indicates an unacceptable increase in chloride ion concentration or significantly high solution volume loss, the test shall be repeated on a further three samples and all of these specimens are required to pass the test.

i) Resistance to Aggregate Indentation

Systems (excluding any tack coat) with an overall thickness of 20mm or greater are exempted from this test.

The tests are conducted at (40 ±2)°C, (80 ±3)°C and (125 ±3)°C.

Nine size (A) concrete blocks with the system fully bonded (excluding any tack coat) are to be used for these tests, i.e. 3 blocks for each test temperature.

Each concrete block is first measured within the central 75mm diameter test area at 4 separate locations using a template (Figure 6) with a dial gauge. The system is then fully bonded and the block re-measured at the same 4 locations using the template and the dial gauge.

The system thickness is calculated by subtracting the measured concrete block thickness from the total thickness. The mean thickness of the system is calculated from the four results.

Aggregate Indentation Test at 40°C

All systems shall be subjected to aggregate indentation at (40 ±2)°C. This is to simulate the compaction of loose aggregates into the system during normal site activities prior to the APL being applied.

Aggregate indentation is simulated by a steel indentor in the shape of a truncated cone. The cone angle is 90°, the diameter at the truncation 8mm and the diameter at the base not less than 25mm.

Indentation is produced by forcing the truncated end into the system using a test machine that measures force and displacement simultaneously. The indentor is electrically heated to a temperature of (40 ±2)°C and the samples shall have been preconditioned for at least 4 hours at (40 ±2)°C. The test is conducted at a temperature of (40 ±2)°C checked by a probe or thermocouple (Figure 7).

Indentations are made in the same 4 locations as the thickness measurements. Each indentation is made by driving the indentor into the system at a rate of 5mm/ minute. Indentation is stopped when the force applied reaches 1000N. The load is removed at the same rate. The sample is then conditioned for a minimum of 24 hours at (23 ±2)°C to allow the system to recover.

The overall thickness is then measured at the same 4 locations using the template and the dial gauge. Individual thickness measurements are then determined by subtracting the concrete block thickness from the overall thickness.

Indentation after the recovery period shall not exceed 50% of the initial thickness of the system.

The chloride ion test (B4.2(e)) at (23 ±2)°C shall then be applied.

Aggregate Indentation Test at 80°C

This test including the chloride ion test (B4.2(e)) at (23 ±2)°C is the same as that at (40 ±2)°C except that the temperature of the indentor is (80 ±3)°C and the indentor is stopped when the force reaches 500N.

Aggregate Indentation Test at 125°C

This test shall be carried out unless the manufacturer indicates that the system is not suitable to be tested at (125 ±3)°C.

The indentor, number of indentations, application loads and procedure are the same as for the test at (40 ±2)°C except that the preconditioning temperature shall be (50 ±3)°C.

The temperature controlled cabinet is maintained at (50 ±3)°C. The indentor is electrically heated to a constant (125 ±3)°C.

The requirements for indentation and chloride ion test (B4.2(e)) at (23 ±2)°C remain as for the test at (40 ±2)°C.

If the system fails to meet these criteria at (125 ±3)°C but is satisfactory at (80 ±3)°C and (40 ±2)°C then APL shall always be applied. (Also see paragraph 9.4 for relaxation of APL).

j) Thermal Shock, Heat Ageing and Crack Cycling

Nine size (C) concrete blocks with the membrane fully bonded are to be used for this test, i.e. 3 blocks for each test temperature. See Figure 1 for extent of membrane application. For liquid applied membranes the concrete block shall be masked over length ways, 40mm either side before applying the membrane.

The sample is first subjected to a thermal shock to simulate the application of hot surfacing, and then heat ageing followed by crack cycling.

i) Thermal Shock

A wooden box with no base, having a wall thickness of 50mm, a height of 55mm and internal plan of (170 x 170)mm is placed on the membrane in the centre of the test block over the area where the crack cycling test is to be made. A thermocouple or similar is placed on the surface of the membrane within the box and the temperature progressively recorded. Aluminium foil (thin gauge) is laid on the membrane and lines the inside of the box.

A suitable heat source, such as liquid bitumen or hot sand is poured into the box and sealed in to give a temperature of (145 ±5)°C on the surface of the membrane.

Due to heat loss the initial temperature of the heated material is to be approximately 240°C. After two hours the heat source is removed and the sample conditioned at (23 ±2)°C for at least 4 hours.

If necessary where the membrane incorporates a protective layer, this may be removed to permit examination of the membrane proper for cracks.

ii) Heat Ageing

The samples are placed in a ventilated oven and maintained at (70 ±3)°C for 28 days. These are then conditioned for 24 hours at (23 ±2)°C.

iii) Crack Cycling

Crack cycling is conducted at (-10 ±2)°C, (23 ±2)°C and (40 ±2)°C respectively after the recovery period of the heat ageing test.

Initial cracking of the sample at the crack inducer (Figure 1) is made using a suitable crack cycling apparatus (Figure 8). Cracking is induced at (23 ±2)°C and the crack width is limited to 1.0mm.

The sample is then cycled at a rate of 1 cycle/second to the maximum crack width at one of the above temperatures and subjected to a total of 100 cycles. On completion the crack is maintained at maximum opening for 24 hours at the test temperature.

There shall be no visually obvious cracks in the membrane proper at any stage during the test.

After conditioning the test sample for a minimum of 24 hours at (23 ±2)°C the chloride ion test (B4.2(e)) at (23 ±2)°C shall be applied.

The complete test is repeated for each of the above temperatures.

k) Surfacing to Waterproofing System Interface Shear Adhesion Test

This test is conducted at (-10 ±2)°C, (23 ±2)°C and (40 ±2)°C. Fifteen size (A) concrete blocks i.e. 5 blocks for each test temperature are used with the system fully bonded together with any tack coat specified for the system.

Samples are prepared with an overlay of sand asphalt and/or hot rolled asphalt using mixtures as specified in IS EN 13108, the rolling temperature being within the range specified in IS EN 13108, and in particular

i) where a minimum rolling temperature to achieve bond to the system is declared, this shall be applied

or

ii) where a tack coat forms part of the system the rolling temperature shall be the minimum temperature declared to activate the tack coat.

The sand asphalt and hot rolled asphalt shall be prepared as and when required in compliance with IS EN 13108-4. Reheated material shall not be used.

For samples overlaid with sand asphalt, it shall be compacted to a nominal thickness of 20 mm and the total overlay thickness made up with hot rolled asphalt laid and compacted to a finished total nominal thickness of 50mm. Sand asphalt shall comply with IS EN 13108-4, recipe Type F wearing course mixture Designation 0/3. The make-up of the hot rolled asphalt shall comply with IS EN 13108-4 Table 2 50/10.

For samples overlaid with hot rolled asphalt only it shall comply with IS EN 13108-4 Table 2 50/10, and be laid and compacted to a nominal thickness of 50mm.

The binder throughout shall be 40/60 pen bitumen complying with IS EN 12591.

The test samples shall have been pre-conditioned at (-10 ±2)°C, (23 ±2)°C and (40 ±2)°C for at least 4 hours and then supported in a test frame (Figure 9).

This complete apparatus is placed in a temperature controlled cabinet and maintained at one of the test temperatures.

A shearing force shall be applied to the sand asphalt and/or hot rolled asphalt via a steel loading plate at the rate of 20mm/minute; the load and deformation characteristics being continuously recorded. The test shall be continued until the sample fails.

The assembly is then removed, the failure interface and peak force noted and failure stress determined. The stress at failure for each individual sample shall be not less than 0.2N/mm^2 at (-10 ±2)°C and (23 ±2)°C respectively, and 0.1N/mm^2 at (40 ±2)°C.

l) Surfacing to Waterproofing System Interface Tensile Bond Test

Four size (B) concrete blocks are to be used with the system fully bonded together with any tack coat specified for the system.

Specimens are prepared with an overlay of sand asphalt or hot rolled asphalt using a mixture as specified in IS EN 13108-4, the rolling temperature being within the range specified in CC-SPW-0900, and in particular

i) where a minimum rolling temperature to achieve bond to the system is declared, this shall be applied

or

ii) where a tack coat forms part of the system the rolling temperature shall be the minimum temperature declared to activate the tack coat.

The sand asphalt and hot rolled asphalt shall be prepared as and when required in compliance with IS EN 13108. Reheated material shall not be used.

For samples overlaid with sand asphalt, it shall be laid and compacted to a nominal thickness of 20mm and comply with IS EN 13108-4 recipe Type F wearing course mixture Designation 0/3.

For samples overlaid with hot rolled asphalt, it shall comply with IS EN 13108-4 Table 2 50/10, and be laid and compacted to a nominal thickness of 50mm.

The binder throughout shall be 40/60 pen bitumen complying with IS EN 12591.

On each sample two test areas (100 x 100)mm are isolated by cutting down to the concrete without disturbance to the complete system. Steel plates are bonded to the test areas with a suitable adhesive (see Fig 10).

The test shall be carried out at (23 ±2)°C on a tensile testing machine with a crosshead speed of 20mm/minute.

The test samples shall have been preconditioned at (23 ±2)°C for at least 4 hours.

Bond failure at the interface of the system and the sand asphalt or hot rolled asphalt shall be not less than 0.7N/mm2 for each specimen.

B4.3 Site Trial

a) Procedures and requirements for the site trial are given in Appendix C

b) The site trial shall be formally assessed by the NSAI or equivalent body. The TII reserve the right to attend any site trial.

B5. References

The following documents are referred to in this Appendix B.

B5.1 TII Publications (Standards) References

CC-SPW-01700 - Specification for Road Works Series 1700 – Structural Concrete

B5.2 References to IS/EN/BS Standards

IS EN 197-1 - Cement - composition, specifications and conformity criteria for common cements

IS-EN 124 - Gully tops and manhole tops for vehicular and pedestrian areas

IS EN 12620 – Aggregates for concrete

IS EN 13108 – Bituminous mixtures

IS EN 12591 - Bitumen and bituminous binders - specifications for paving grade bitumens

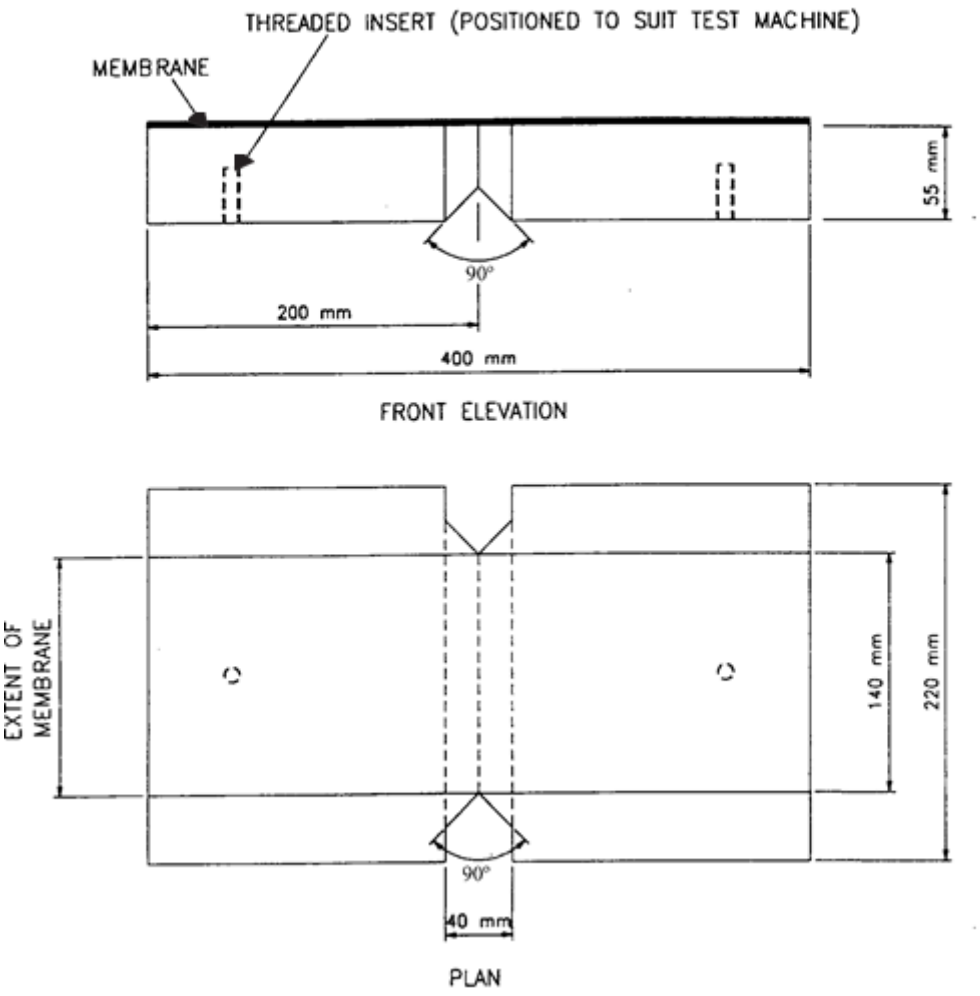

Figure 1 **CONCRETE TEST BLOCK WITH CRACK INDUCER (SCALE 1:4 APPROX) ALL DIMENSIONS ARE IN mm**

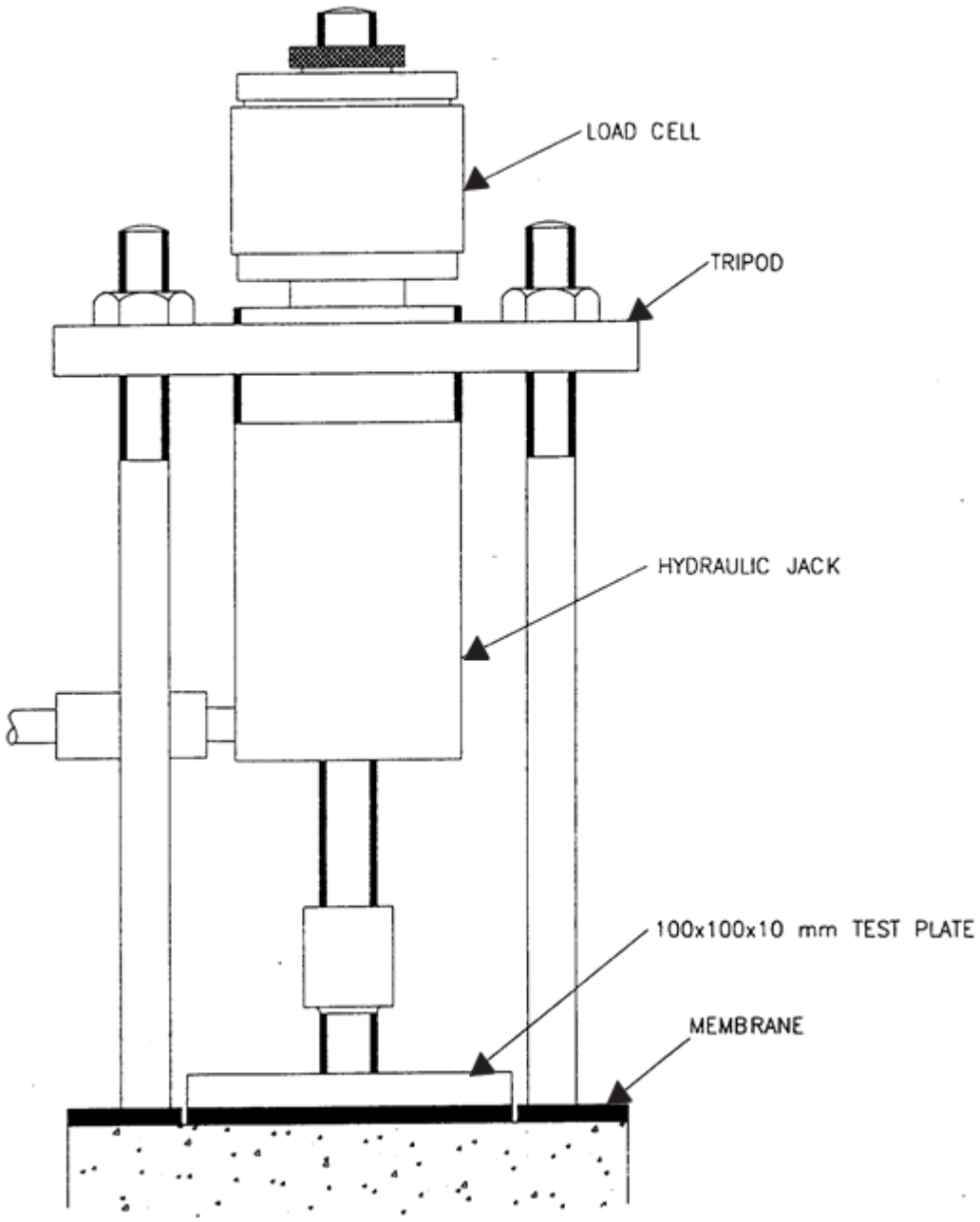

Figure 2 EXAMPLE OF A TENSILE PULL-OFF (SCALE: HALF FULL SIZE)

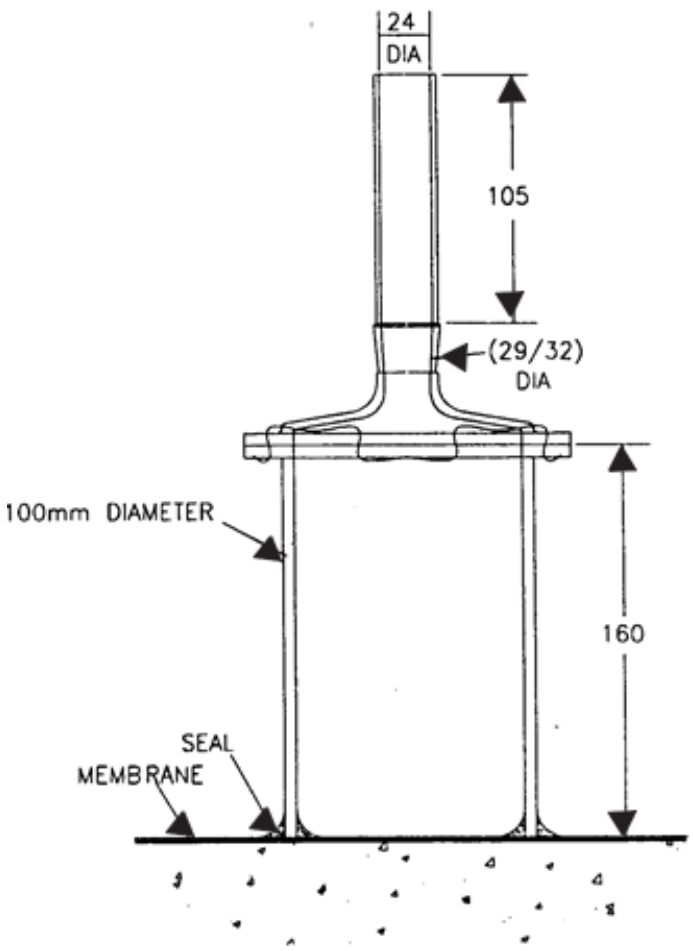

Figure 3 **CHLORIDE ION PENETRATION TEST (SCALE 1:3 APPROX) ALL DIMENSIONS ARE IN mm**

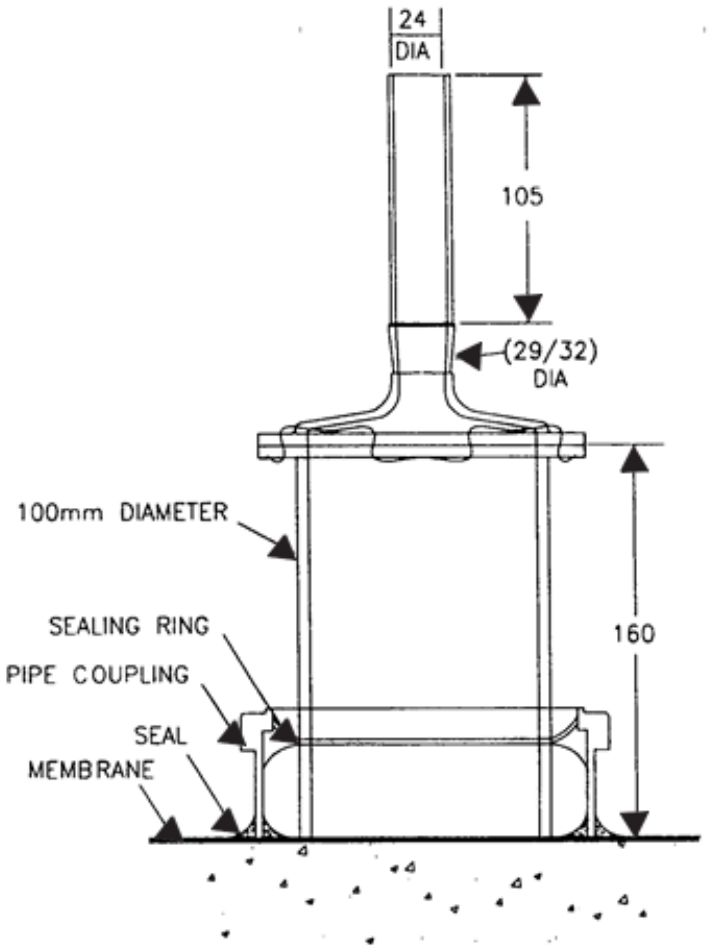

Figure 4 **EXPOSURE TO WATER OR CHLORIDE IONS GLASSWARE (SCALE 1:3 APPROX) ALL DIMENSIONS ARE IN mm**

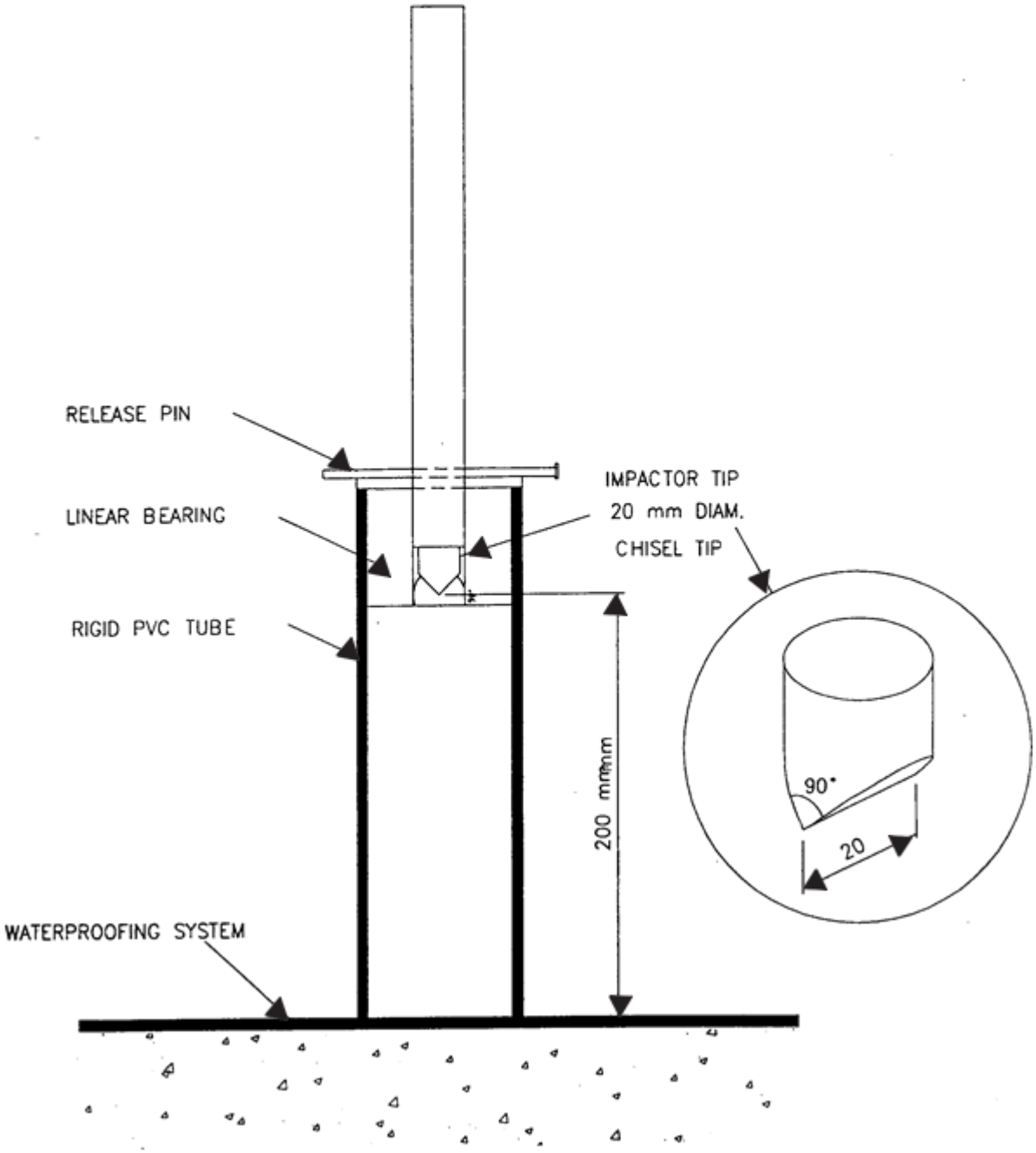

Figure 5 CHISEL IMPACT APPARATUS (SCALE: 1:3 APPROX)

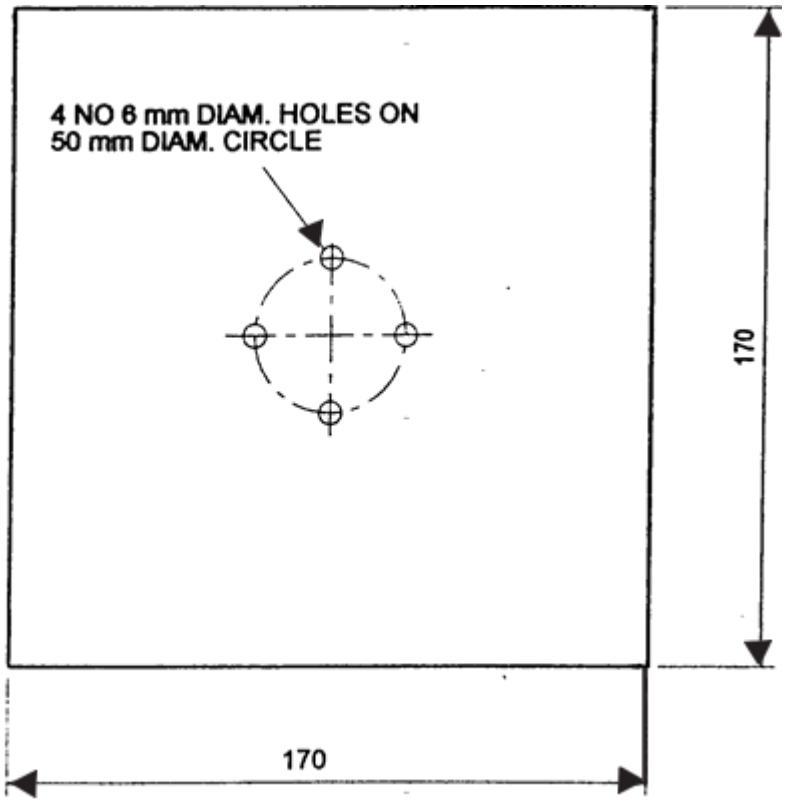

Figure 6 **AGGREGATE INDENTATION TEST TEMPLATE (SCALE HALF FULL SIZE) ALL DIMENSIONS ARE IN mm**

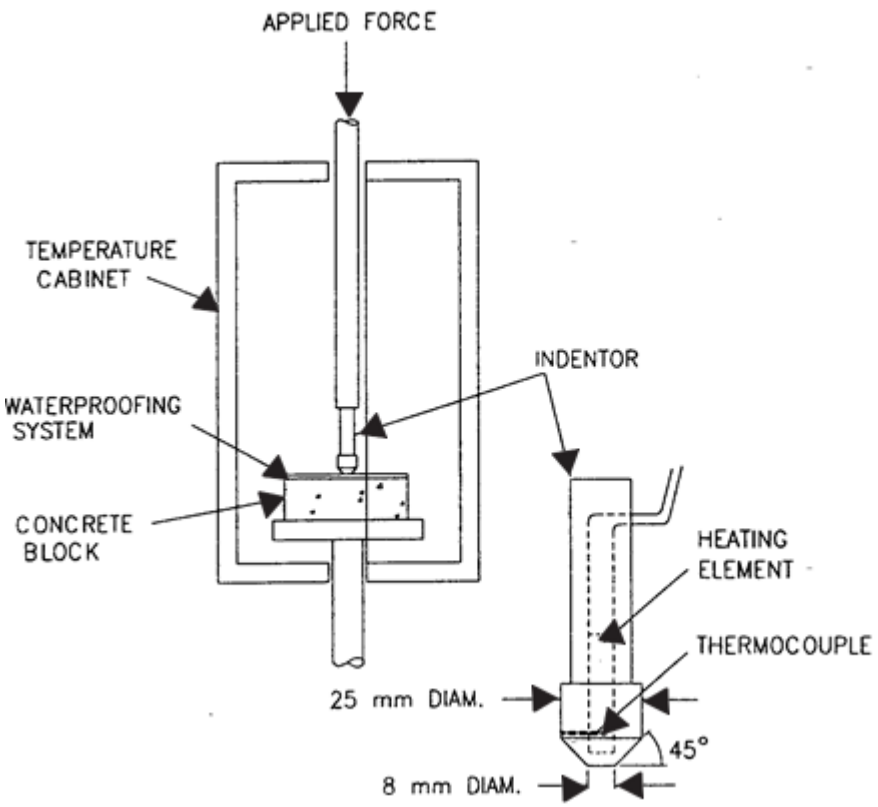

Figure 7 **AGGREGATE INDENTATION TEST (SCALES 1:10 & 1:2 APPROX)**

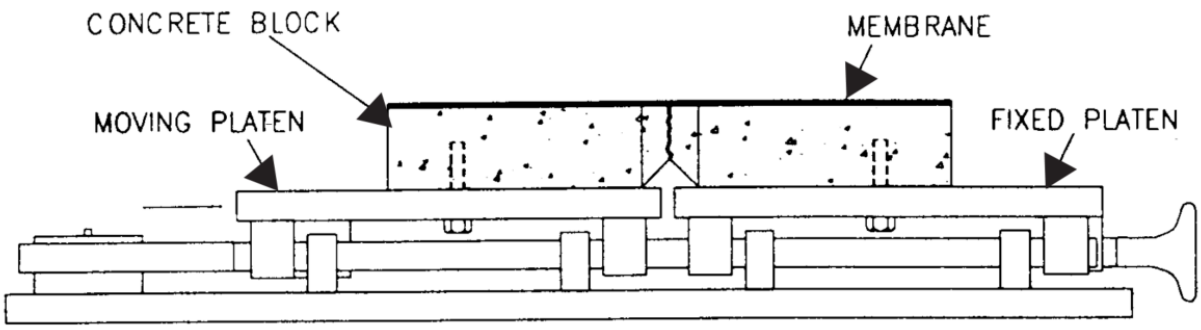

Figure 8 CRACK CYCLING APPARATUS (SCALE 1:6 APPROX)

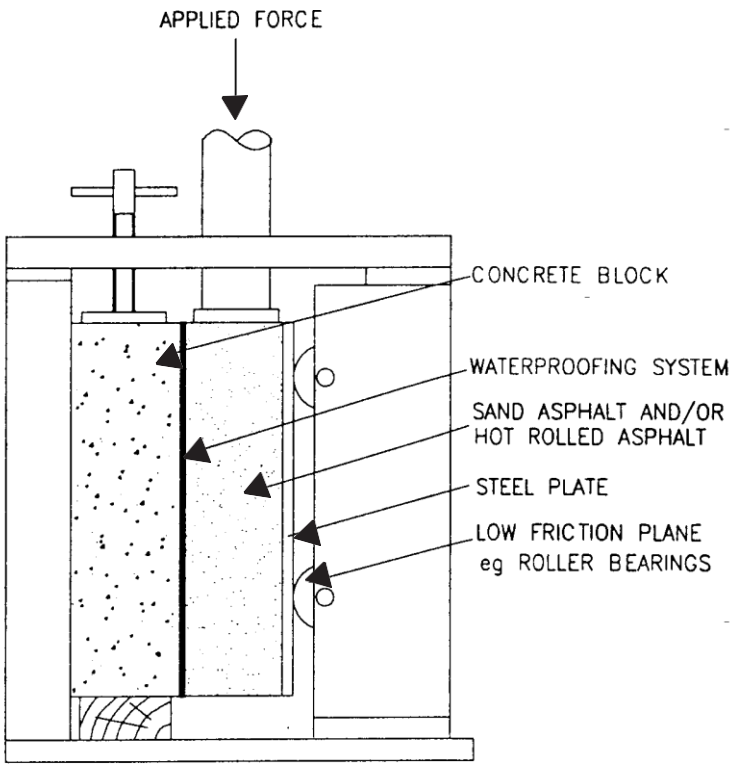

Figure 9 SHEAR ADHESION APPARATUS (SCALE 1:3 APPROX)

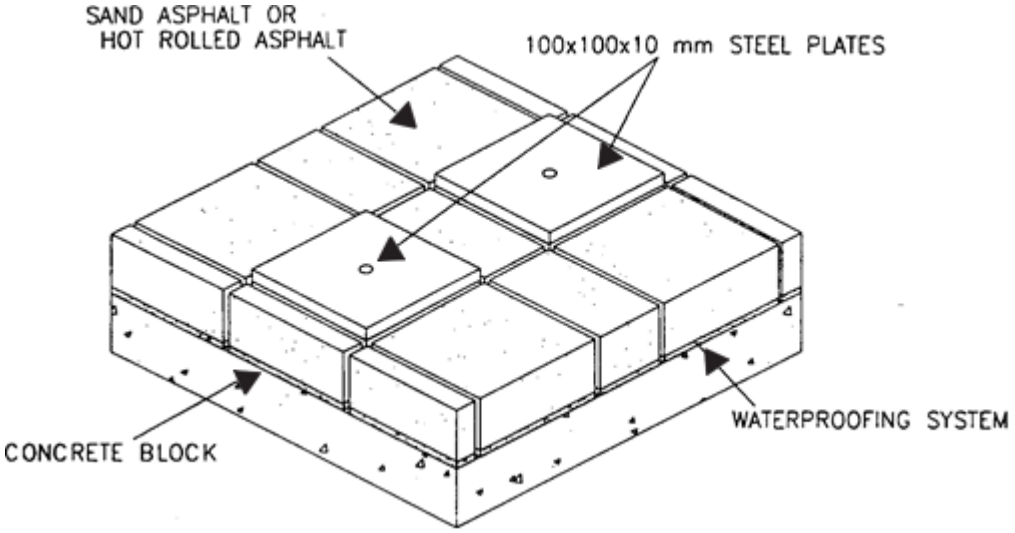

Figure 10 PREPARED SAMPLE FOR CHECK OF INTERFACE TENSILE BOND

Appendix C:

Procedures and Requirements for Certification Site Trials for Permitted Waterproofing Systems (PWS)

Part of the requirements for the award of a NSAI Agrément Certificate or equivalent for a PWS is a successful site trial on an actual bridge deck. This can take place only after the laboratory tests and checks have been successfully completed by the NSAI or equivalent body. It is then for the manufacturer or their representative of the PWS to arrange for the system to be installed on a suitable bridge.

In arranging the site trial the manufacturer or their representative shall take into account the following procedures and requirements.

C1. Where a bridge is being considered for the site trial the bridge owner or road authority shall consider the importance of the bridge location (i.e. not on a strategic route), when giving agreement in principle to the installation of a waterproofing system undergoing a Certification site trial.

C2. The NSAI or equivalent body shall be sent a general arrangement drawing of the bridge showing the size and type of deck including a cross section showing details of the waterproofing system. A minimum deck area of 150 square metres is necessary and the bridge shall include some features such as parapet upstands, service bays and fillets. Also required are details of

a) Bridge name, location and bridge owner/road authority.

b) Whether the bridge is of new construction or in the course of maintenance.

c) Surfacing type, thickness and size and type of aggregate when not given on the drawing.

d) Additional protective layer i.e. sand asphalt to be applied to the system.

e) Make-up of deck concrete i.e. proportion of cement replacements and other additives in the concrete.

f) Concrete curing method.

g) Proposed dates of installation of the system and surfacing. When this is not known then the likely dates which can be confirmed as the programme progresses.

C3. Where the NSAI or equivalent body confirms that the bridge is acceptable for the site trial the manufacturer or their representative may pursue arrangements with the road authority and the Contractor and shall advise them that the site trial will be formally assessed by the NSAI or equivalent body. TII reserve the right to attend the site trial.

C4. The site trial shall be performed in a workmanlike manner by trained operatives under competent supervision and shall afford the level of quality of workmanship required for the Certification.

C5. In addition to the NSAI Agrément Certification or equivalent requirements the works shall comply with the TII Specification for Road Works.

C6. The site trial shall include observation of the preparation of the concrete deck, the installation of the waterproofing system and the surfacing. The performance of the system between its installation and prior to overlaying with the surfacing shall also be monitored.

C7. On arrival at the trial site the NSAI or equivalent body shall inspect the condition of the concrete deck. This shall be U4 finish but the manufacturer or their representative may opt to apply the system on a deck with a lesser finish in consultation with the NSAI or equivalent body. In such a case the system will be expected to perform as though the finish was U4. The deck surface shall be clean, dry and free from ice, frost and laitance etc. as per the requirements of CC-SPW-02000.

C8. Before any part of the waterproofing system is installed the NSAI or equivalent body shall verify that the system is as that submitted for the laboratory tests.

C9. Discrepancies that arise with respect to either site conditions or changes to the waterproofing system shall be agreed with the NSAI or equivalent body before the site trial can proceed.

C10. On site the concrete surface and air temperature shall be measured by the manufacturer or their representative using thermocouples or similar. This shall be checked frequently over the period of the site trial. The relative humidity shall also be noted at the same time.

C11. The nominal coverage rates and setting times of the liquid components of the system shall accord with the manufacturer's specification. Checks shall be made for ponding of primers and any ponding that has occurred shall be minimal.

C12. During and after installation of the system the following requirements shall apply:

i) The thickness of liquid membranes shall be a minimum of 2mm over peaks, arrises and irregularities in the concrete deck and shall be checked with a wet film thickness gauge or other appropriate method by the manufacture or their representative.

ii) There shall be appropriate bond to the concrete substrate checked by the manufacturer or their representative and it shall be virtually free from visible defects including pin/blow holes and blisters which shall be made good by repair before being covered.

iii) The manufacturer or their representative laying the waterproofing system at the site trial shall demonstrate to the an acceptable repair method.

iv) The manufacturer or their representative shall demonstrate the integrity of the waterproofing membrane by an appropriate NDT method agreed with the NSAI or equivalent body.

C13. The waterproofing system shall be checked for damage before applying the APL or asphalt surfacing. Where damage has occurred it shall be suitably repaired before the trial proceeds.

C14. In order to dispense with the requirement of the APL for waterproofing systems which are less than 20mm thick and which have complied with the 125°C aggregate indentation test in the laboratory, Clauses C13 to C22 inclusive shall apply except that the APL shall be replaced with asphalt surfacing.

C15 The placing temperature of the APL or asphalt surfacing, measured with a suitable temperature probe by the manufacturer or their representative shall not exceed 145°C.

The minimum rolling temperature of the APL or asphalt surfacing shall not be less than that specified in IS EN 13108 or less than the minimum declared activation temperature for bond to the system, whichever is greater.

C16. Prior to the completion of the APL or asphalt surfacing laying on site, the compacted but still hot APL or asphalt surfacing is removed from a sample area of the system and any damage to the waterproofing membrane is observed.

C17 If damage has occurred restrictions on any further application of the surfacing may be imposed and the damaged waterproofing membrane shall be repaired or replaced.

C18. Where no damage occurs the cut back areas are then filled with new APL or asphalt surfacing and compacted.

C19. Throughout the site trial, workmanship, supervision and general site procedure will be observed by the NSAI or equivalent body. Where this is at an unacceptably low standard, Certification shall not be granted.

C20. Where the system is deemed to have failed the site trial, the Contractor shall be instructed to remove the failed system from the bridge and dispose off-site. The bridge shall then be waterproofed with a registered system.

C21. If during the site trial it is considered that the system is unlikely to proceed to a successful conclusion, then the manufacturer or their representative may be given an opportunity to abort the site trial and propose modifications to the system/procedures to be considered for a further trial. The manufacturer or their representative shall provide a written report to the NSAI or equivalent body with proposed changes that would overcome identified deficiencies in the original submission. If the proposed modifications are acceptable to the NSAI or equivalent body the manufacturer or their representative will be allowed to make arrangements for a further site trial.

C22. Notwithstanding Clause C21, the bridge owner/road authority reserve the right to have the bridge waterproofed with a registered system.

Bonneagar Iompair Éireann
Transport Infrastructure Ireland

Ionad Ghnó Gheata na Páirce,
Stráid Gheata na Páirce,
Baile Átha Cliath 8, D08 DK10, Éire

www.tii.ie

+353 (01) 646 3600

Parkgate Business Centre,
Parkgate Street,
Dublin 8, D08 DK10, Ireland

info@tii.ie

+353 (01) 646 3601