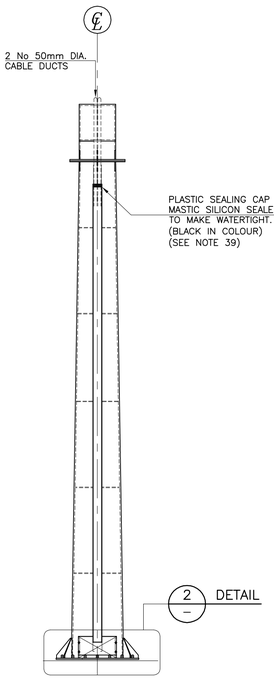

REAR ELEVATION
GANTRY LEG
SCALE 1:50

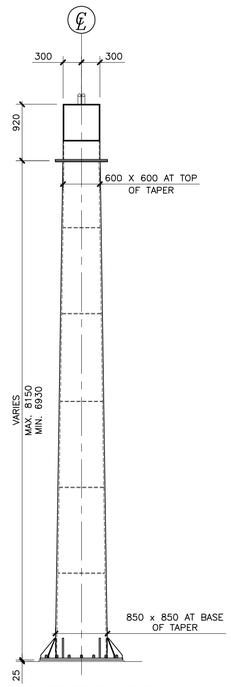

FRONT ELEVATION
GANTRY LEG
SCALE 1:50

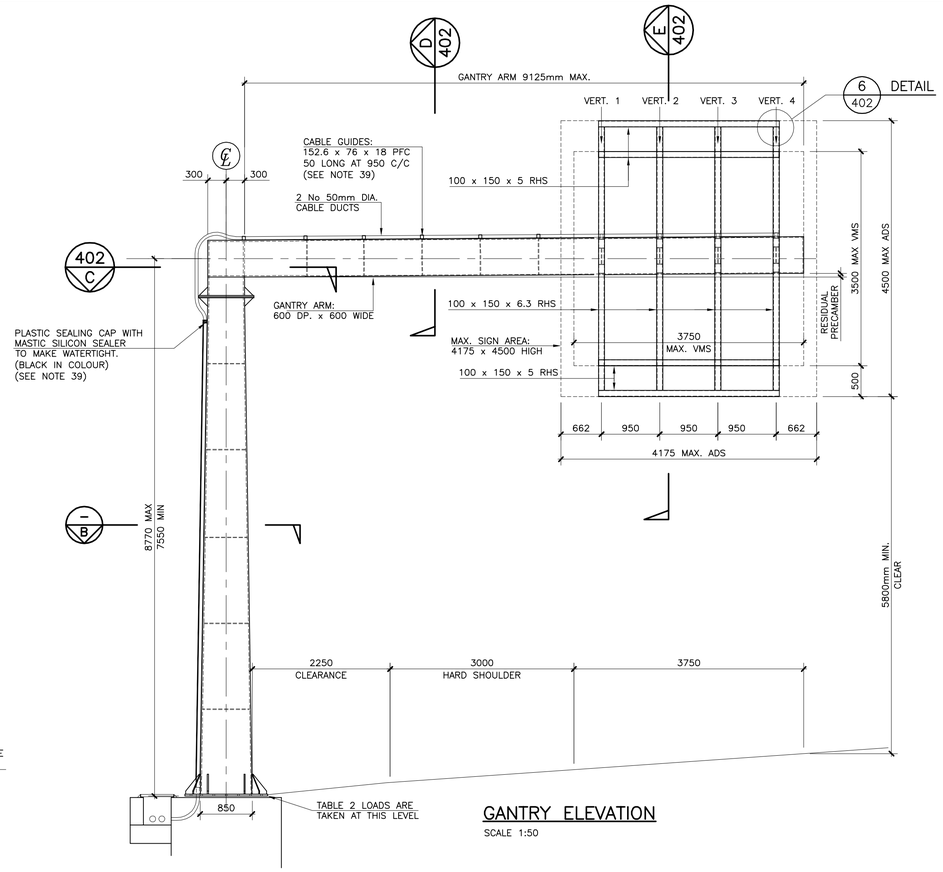

GANTRY ELEVATION
SCALE 1:50

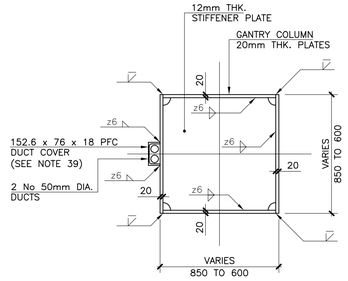

SECTION B
SCALE 1:20

NOTES

1) ALL DIMENSIONS ARE IN MILLIMETRES.

2) THE ENGINEER FOR THE SPECIFIC GANTRIES SHALL PROVIDE GENERAL ARRANGEMENT DRAWINGS FOR THE SPECIFIC GANTRY SCHEME. ALL INFORMATION THAT IS SITE SPECIFIC MUST BE INCLUDED ON THESE DRAWINGS

3) STEEL SHALL BE S355J2G3 TO BS EN 10025 UNLESS OTHERWISE NOTED. HOLLOW SECTIONS TO BE GRADE S355J2H TO ISEN 10210. UNLESS OTHERWISE NOTED

4) THE STEELWORK DIMENSIONS SHOWN ARE SPECIFIED FOR A MEAN TEMPERATURE OF 12 DEGREES CENTIGRADE.

5) STRUCTURAL STEELWORK TO BE IN ACCORDANCE WITH NATIONAL ROADS AUTHORITY (NRA) SPECIFICATION FOR ROADWORKS.

6) PROTECTION TO STEELWORK TO BE IN ACCORDANCE WITH NRA SPECIFICATION FOR ROADWORKS OR APPROVED ALTERNATIVE. FINAL COLOUR TO BE APPROVED BY NRA.

7) THE APPLIED FORCES GIVEN IN TABLE 2 ASSUMES A CANTILEVER LENGTH OF 9.125m. THE DESIGNER SHALL FACTOR AND COMBINE THE FORCES IN ACCORDANCE WITH THE NATIONAL ROADS AUTHORITY DESIGN MANUAL FOR ROADS AND BRIDGES IN ORDER TO DESIGN THE SUBSTRUCTURE.

8) LIFTING EYES TO BE DESIGNED BY STEELWORK FABRICATOR AND SUBMITTED TO THE DESIGNER OF SPECIFIC GANTRIES FOR APPROVAL AT LEAST 4 WEEKS PRIOR TO FABRICATION. TEMPORARY WELDED ATTACHMENTS REQUIRED FOR ERECTION SHALL BE REMOVED AND PROTECTIVE COATING SYSTEM APPLIED IN ACCORDANCE WITH SPECIFICATION.

9) METHOD OF ERECTION OF GANTRY TO BE APPROVED BY THE DESIGNER OF SPECIFIC GANTRIES.

10) ANY TEMPORARY ARRANGEMENT REQUIRED FOR LANDING MAIN BEAM PRIOR TO SITE CONNECTION SHALL BE AGREED WITH THE ENGINEER 4 WEEKS PRIOR TO FABRICATION.

11) TEMPORARY WELDED ATTACHMENTS SHALL BE SUBJECT TO APPROVAL BY THE ENGINEER.

12) WELD SYMBOLS ARE IN ACCORDANCE WITH BS EN 22553.

13) ALL FILLET WELDS SHALL BE 6 MM LEG LENGTH AND CONTINUOUS UNLESS NOTED OTHERWISE.

14) BOLTS SHALL BE AS DESCRIBED ON THE DRAWING.

15) COPE HOLES AND RE-ENTRANT CORNERS SHALL HAVE A RADIUS OF AT LEAST 50 MM OR 1.25 TIMES THE PLATE THICKNESS, WHICHEVER IS GREATER, UNLESS NOTED OTHERWISE.

16) STEEL PLATES CALLED UP AS "Z35" ON THE DRAWINGS SHALL HAVE ENHANCED THROUGH THICKNESS PROPERTIES IN ACCORDANCE WITH ISEN 10164 TO CLASS Z35.

17) HARD STAMPING SHALL NOT BE PERMITTED ON ANY PERMANENTLY EXPOSED SURFACES

18) MAX. WEIGHT OF VMS 70kg/m^2.
MAX. WEIGHT OF ADS 20kg/m^2.

19) MAX. DEPTH OF SIGN 400mm.

20) STRUCTURAL STEELWORK SUPPORTING SIGNAGE OFF GANTRIES HAS A MAX. ASSUMED WEIGHT OF 27.9kg/m. THE STRUCTURAL ADEQUACY OF ALTERNATIVE ARRANGEMENTS PROPOSED BY THE DESIGNER OF SPECIFIC GANTRIES TO ACCOMMODATE SPECIFIC SIGNS SHALL BE VERIFIED BY THE DESIGNER OF SPECIFIC GANTRIES.

21) VERTICALS 1 AND 4 ARE DESIGNED TO SUPPORT VARIABLE MESSAGE SIGNAGE (VMS). VERTICALS 2 AND 3 ARE OMITTED TO ALLOW ACCESS TO BACK OF VMS. ALL VERTICALS ARE REQUIRED FOR ADVANCED DIRECTIONAL SIGNAGE.

22) TOPOGRAPHY FACTOR Sh' DEFINED IN BD 37/01 CLAUSE 5.3.2.3.3 IS ASSUMED AS 1.1

23) MAXIMUM WIND GUST SPEED (Vd) IS TAKEN AS 51.58 m/sec CALCULATED IN ACCORDANCE WITH BD 37/01.

24) THESE DRAWINGS ARE TO BE READ IN CONJUNCTION WIDTH THE SAMPLE GENERIC RISK ASSESSMENT AND SAMPLE SPECIFICATION APPENDICES THAT HAVE BEEN COMPLETED FOR THE GANTRY DESIGNS. DESIGNERS OF SPECIFIC SCHEMES SHOULD OBTAIN A COPY FROM THE NRA PRIOR TO COMMENCING SITE SPECIFIC DESIGNS.

25) ALL BOLTS AND NUTS TO BE VIBRATION RESISTANT.

26) ALL WELDS ARE IN TENSION UNDER IN-SERVICE CONDITIONS.

27) REINFORCEMENT IN BASE TO BE MECHANICALLY FIXED TO GANTRY LEG HOLDING DOWN BOLTS.

28) MINIMUM CLASS OF CONCRETE IN FOUNDATION TO BE CLASS 40.

29) ALL ELEMENTS TO BE LIFTED FROM LIFTING EYES. SLINGS NOT TO BE USED TO PREVENT DAMAGE TO PROTECTIVE COATING.

30) SECONDARY STEEL WORK MUST COINCIDE WITH INTERNAL STIFFENING PLATES ON CANTILEVER ARM.

31) GANTRIES ARE ASSUMED PERPENDICULAR TO THE MAINLINE.

32) SECONDARY SIGNWORK STRUCTURAL STEELWORK NOT TO BE USED FOR LIFTING UNLESS STRUCTURAL ADEQUACY IS VERIFIED.

33) THE SECONDARY SIGN STEELWORK VERTICALS AND SIGN LAYOUT ARE INDICATIVE OF THE MAXIMUM SIGN AREA THE GANTRY HAS BEEN DESIGNED FOR. THE SIGN LAYOUT AND THE NUMBER OF SECONDARY SIGN STEELWORK VERTICALS SHOULD BE PROVIDED TO SUIT SITE SPECIFIC REQUIREMENTS AND NOT EXCEED THOSE SHOWN ON THE DRAWING.

34) THE DEFLECTION SHOWN ASSUMES CANTILEVER LENGTH OF 9.125m. THE RESIDUAL DEFLECTION AFTER DEAD AND SUPERDEAD LOADS FOR SPECIFIC SCHEMES SHALL BE AS SHOWN ON THE TABLE AND BE ACHIEVED AT THE CANTILEVER TIP WITH A STRAIGHT CHORD.

35) CARRAIGEWAY CROSS SECTIONAL DIMENSIONS ARE INDICATIVE ONLY.

36) SIGN SUPPORT DETAILS AND CABLE RUNS REQUIRED SHALL BE CONFIRMED BY THE DESIGNER OF THE SPECIFIC GANTRIES WITH ELECTRICAL SUPPLIER.

37) DUCTING TO BE BE PROVIDED BY SPECIALIST SUBCONTRACTORS.

38) CLOSED FABRICATED BOXES (LEG AND ARM) ARE REQUIRED TO BE AIR TIGHT. LEAK TESTING IS REQUIRED IN ACCORDANCE WITH APPENDIX 1/5.

39) PROVISION OF ELEMENTS SUPPORTING AND ACCOMMODATING ELECTRICAL EQUIPMENT AT SPECIFIC GANTRIES TO BE CONFIRMED WITH THE NRA.

LEGEND

VMS – VARIABLE MESSAGE SIGN
ADS – ADVANCED DIRECTIONAL SIGN

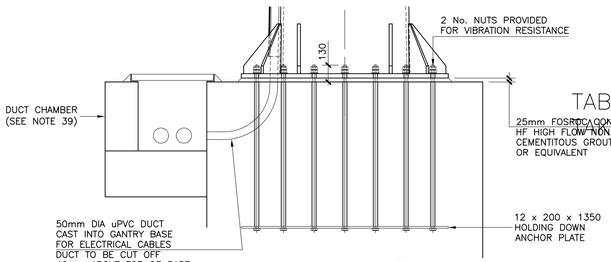

SECTION A
SCALE 1:20

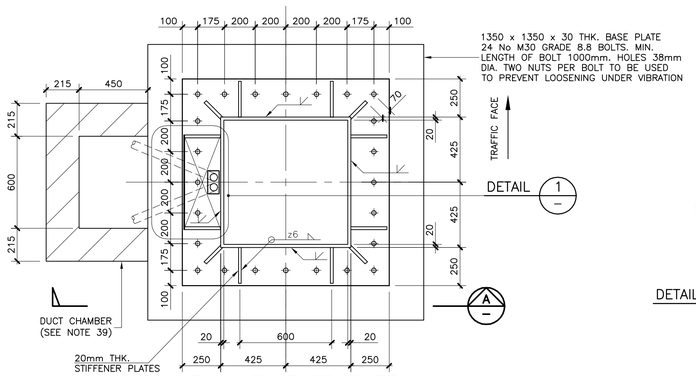

PLAN ON BASE PLATE
SCALE 1:20

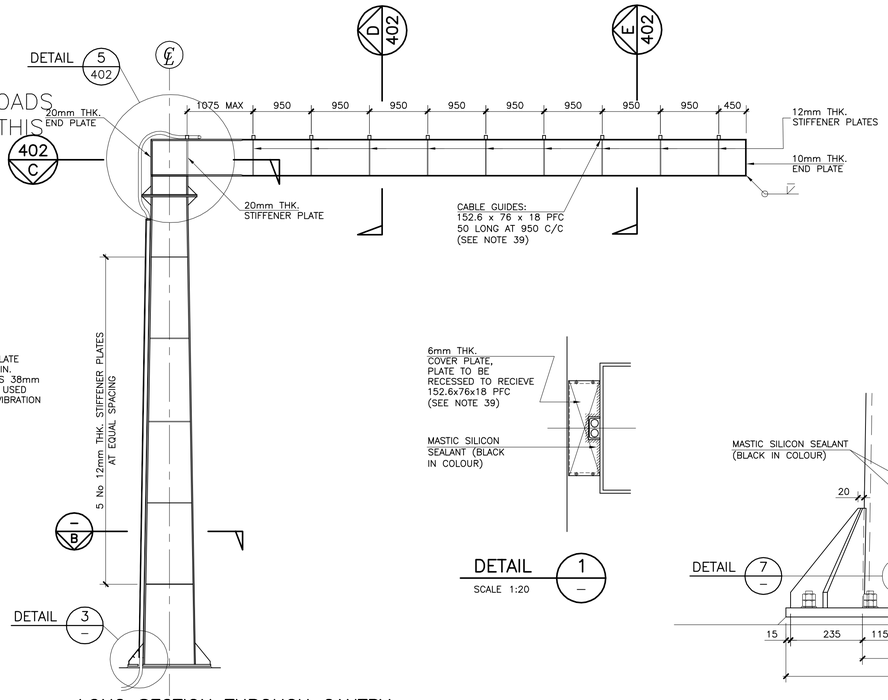

LONG SECTION THROUGH GANTRY
SCALE 1:50

DETAIL 1
SCALE 1:20

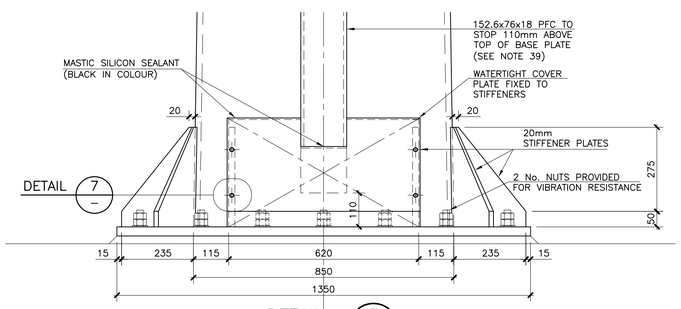

DETAIL 2
SCALE 1:10

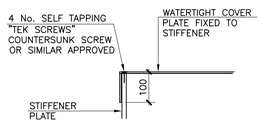

DETAIL 7
SCALE 1:10

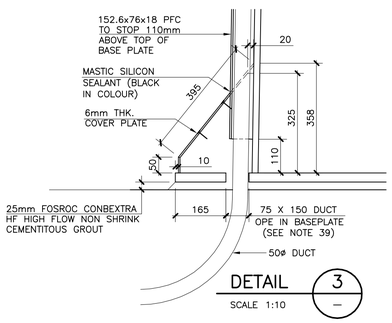

DETAIL 3
SCALE 1:10

NRA NATIONAL ROADS AUTHORITY	ROAD CONSTRUCTION DETAILS	GANTRY GROUP 4	Issue	Date	GENERAL ARRANGEMENT OF GANTRY GROUP 4 SHEET 1 OF 2	Drawing No. RCD/1800/7