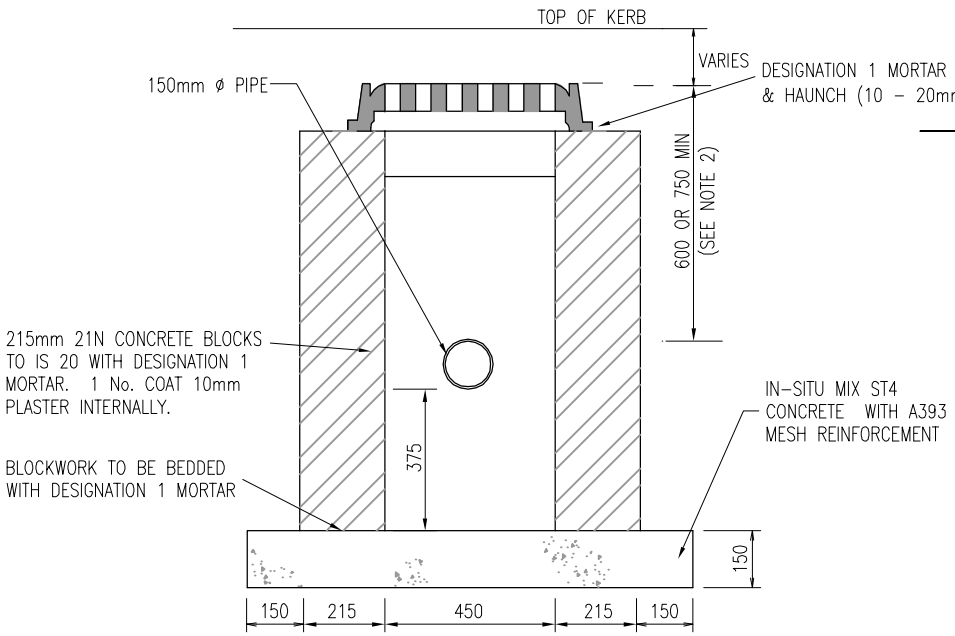

SECTION A–A

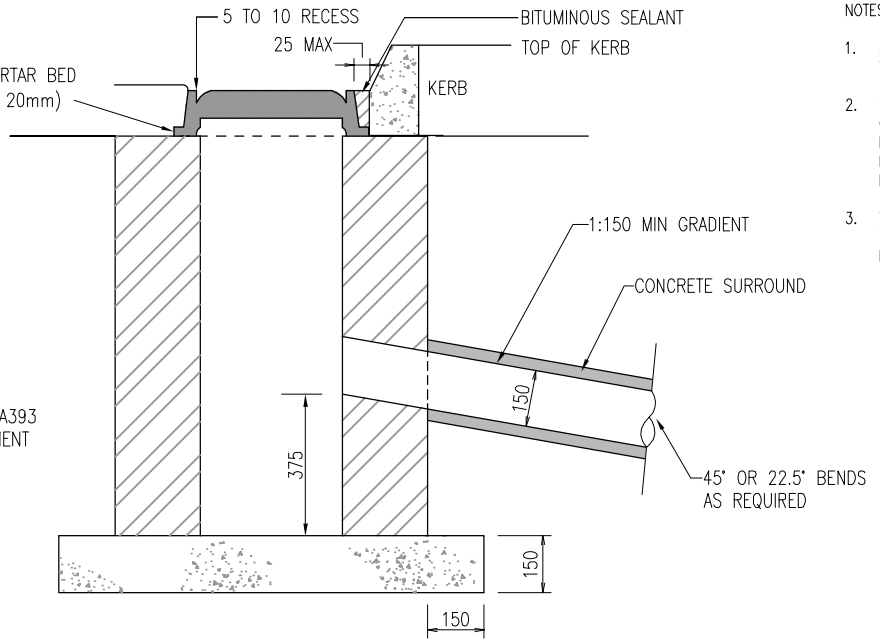

SECTION B–B

NOTES:

1. ALL DIMENSIONS ARE IN MILLIMETRES EXCEPT WHERE STATED.
2. THE MINIMUM DEPTH FROM THE TOP OF THE GRATING TO THE TOP OF THE GULLY OUTLET IS TO BE 750 WHEN THE CONNECTING PIPE IS UNDER A CARRIAGEWAY OR A HARDSHOULDER AND 600 ELSEWHERE.
3. WHEN AN IN–SITU CAST GULLY HAS A TRAP, THE STOPPERS SHALL COMPLY WITH THE REQUIREMENTS OF BS 5911–4 IS EN 1917.

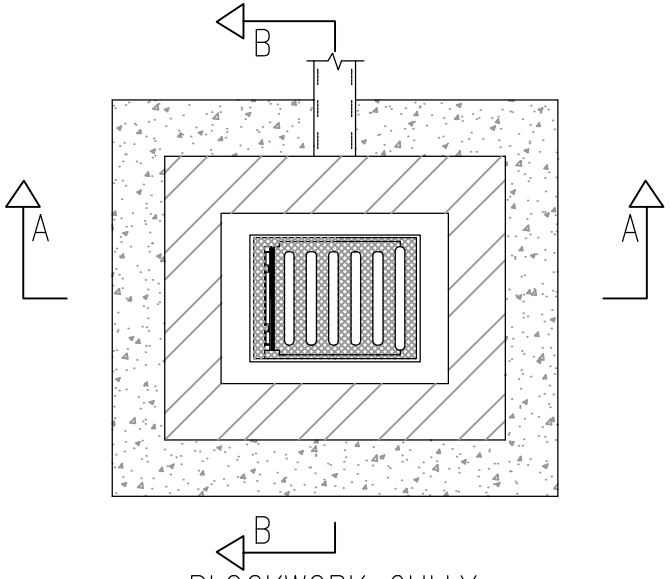

BLOCKWORK GULLY

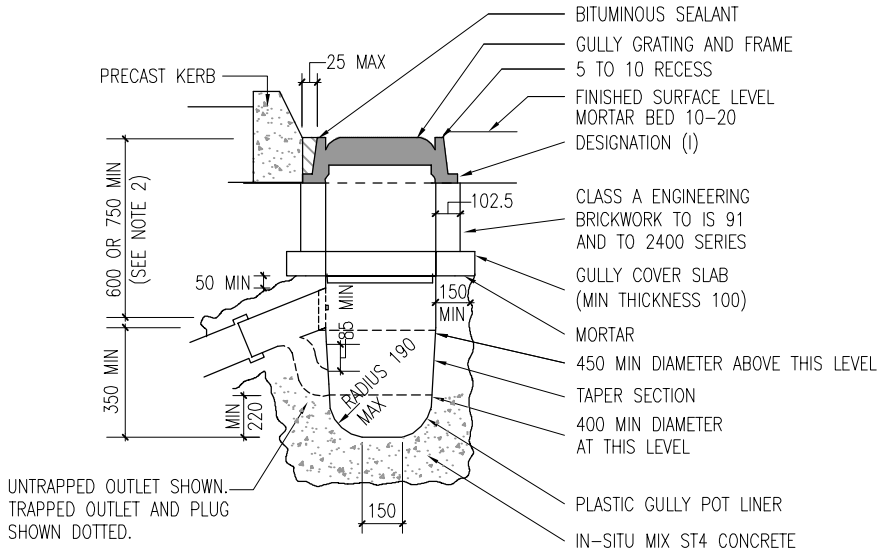

IN–SITU CONCRETE GULLY

NOT TO SCALE

NATIONAL ROADS AUTHORITY	ROAD CONSTRUCTION DETAILS	DRAINAGE	P3	01/09	IN–SITU CONCRETE AND BLOCKWORK GULLIES	Drawing No. RCD/ 500/15
			P2	10/07		
			P1	03/00		
			Issue	Date		