Bonneagar Iompair Éireann
Transport Infrastructure Ireland

TII Publications

GE PE DN CC OP AM RE

The Assessment of Steel Road Bridges and Structures

AM-STR-06035
June 2014

AM Asset Management & Maintenance

Standards

About TII

Transport Infrastructure Ireland (TII) is responsible for managing and improving the country's national road and light rail networks.

About TII Publications

TII maintains an online suite of technical publications, which is managed through the TII Publications website. The contents of TII Publications is clearly split into 'Standards' and 'Technical' documentation. All documentation for implementation on TII schemes is collectively referred to as TII Publications (Standards), and all other documentation within the system is collectively referred to as TII Publications (Technical). This system replaces the NRA Design Manual for Roads and Bridges (NRA DMRB) and the NRA Manual of Contract Documents for Road Works (NRA MCDRW).

Document Attributes

Each document within TII Publications has a range of attributes associated with it, which allows for efficient access and retrieval of the document from the website. These attributes are also contained on the inside cover of each current document, for reference. For migration of documents from the NRA and RPA to the new system, each current document was assigned with new outer front and rear covers. Apart from the covers, and inside cover pages, the documents contain the same information as previously within the NRA or RPA systems, including historical references such as those contained within NRA DMRB and NRA MCDRW.

Document Attributes

TII Publication Title	*The Assessment of Steel Road Bridges and Structures*
TII Publication Number	*AM-STR-06035*

Activity	*Asset Management & Maintenance (AM)*
Stream	*Structures (STR)*
Document Number	*06035*

Document Set	*Standards*
Publication Date	*June 2014*
Historical Reference	*NRA BD 56*

NRA DMRB and MCDRW References

For all documents that existed within the NRA DMRB or the NRA MCDRW prior to the launch of TII Publications, the NRA document reference used previously is listed above under 'historical reference'. The TII Publication Number also shown above now supersedes this historical reference. All historical references within this document are deemed to be replaced by the TII Publication Number. For the equivalent TII Publication Number for all other historical references contained within this document, please refer to the TII Publications website.

Volume 3 Section 4
Part 9
NRA BD 56/14

The Assessment of Steel Road Bridges and Structures

June 2014

St. Martin's House, Waterloo Road, Dublin 4. Tel:+353 1 660 2511 Fax +353 1 668 0009
Email : info@nra.ie Web : www.nra.ie

Summary:

This Standard gives requirements and guidance for the assessment of existing steel road bridges and structures on motorways and other national roads.

Published by National Roads Authority, Dublin 2014

VOLUME 3 ROAD STRUCTURES: INSPECTION AND MAINTENANCE

SECTION 4 ASSESSMENT

PART 9

NRA BD 56/14

THE ASSESSMENT OF STEEL ROAD BRIDGES AND STRUCTURES

Contents

Chapter

1. INTRODUCTION

General

1.1. This Standard gives the requirements for the assessment of existing steel structures and structural elements, and shall be used in conjunction with BS 5400-3 and NRA BD 13, NRA BD 21, NRA BD 86 and NRA BD 37. It provides the assessment process requirements and advice analogous to those in NRA BD 13 for the design process which was used for design prior to the introduction of the Eurocodes in March 2010. The Eurocodes are not used for Assessment. Anywhere in this document where it refers to design, please note this means design prior to the introduction of the Eurocodes.

1.2. Appendix A of this Standard contains the relevant assessment clauses and annexes which have been presented as additions and amendments to the design clauses and annexes in BS 5400-3 as amended by the Appendix A of NRA BD 13. These additions and amendments have been specifically developed to suit assessment conditions and, therefore, must not be used in new design or construction.

1.3. Background information including guidance on the application of this Standard, which is advisory and commended to Designers for consideration, is given alongside the assessment additions. These are in the form of explanations for the main changes from the design code, BS 5400-3:2000, and also advice on the interpretation of the assessment requirements.

1.4. Where there is no assessment addition to a clause in Appendix A, the existing design clause as amended by this Standard must be applicable for assessment.

Scope

1.5. This Standard gives requirements for the assessment of existing steel road bridges and structures on motorways and national roads.

Implementation

1.6. This Standard shall be used forthwith for the assessment of steel road bridges and structures in conjunction with BS 5400-3 as implemented by NRA BD 13.

1.7. The Eurocodes are currently for the design of new structures. At present, the National Roads Authority has no plans to use the current Eurocodes as the basis for assessment. The use of Eurocodes for assessment will be considered once the development of the relevant standards has been completed by the CEN TC 250.

2. ASSESSMENT OF STRENGTH

General

2.1. The objective of this Standard is to produce a more realistic assessment of the strength of steel elements than has previously been possible using the requirements of the now superseded design code. This in part is achieved by taking advantage of the information available to the Assessment Engineer in respect of the material strength, geometrical properties and imperfections, etc. which can only be predicted at the design stage.

2.2. The design code makes certain assumptions and includes specific criteria that enable design to be simplified, since these aspects can be incorporated as required at the design stages. The various requirements provided in the design document are also based on assumptions for imperfections, tolerances and material properties etc., some implicit in the development of the design clauses produced, or otherwise specified in the form of tolerances in BS 5400-6. For these reasons where an existing bridge has to be assessed, the Code cannot be readily used. In some areas it may be unduly conservative, since more information can be ascertained for assessment than was assumed for design. In other areas it may be unsafe since some features in an existing older structure may be worse than assumed in new designs. Also for some forms of construction the Code will just not be applicable, e.g. jack arches.

2.3. Additionally many of the criteria given in the design code are based on experimental evidence which in some cases have been either conservatively interpreted for use in design, or updated by later evidence allowing a less conservative interpretation. For assessment purposes such criteria have been reviewed and amended where appropriate.

2.4. The assessment additions will enable any combination of the following aspects to be dealt with in assessment:

a) measured imperfections and sizes different from those assumed in the code;

b) structural steelwork components and connections not fabricated or erected in accordance with the NRA Specification for Road Works;

c) structural steel material not complying with the relevant standards;

d) general configurations and shape limitations not complying with the limitations in BS 5400-3;

e) restraint stiffnesses and strengths not complying with BS 5400-3; and

f) outmoded forms of construction not complying with BS 5400-3.

Global Analysis

2.5. Plastic analysis of load effects at ultimate limit state for steel beams may be permitted provided that the components are both compact and stocky and that serviceability criteria are met.

2.6. Requirements are given when plastic global analysis is to be used (see 7.5). For global analysis for composite beams see NRA BD 61.

Partial Factor for Loads, γ_{fL}

2.7. Assessment loads Q_A* shall be obtained by multiplying the nominal loads, Q_K by γ_{fL}, the partial safety factor for loads. The relevant values of γ_{fL} are given in NRA BD 21. The assessment loads effects, S_A* shall be obtained by the relation:

$$S_A{}^* = \gamma_{f3}(\text{effects of } Q_A{}^*)$$

Where γ_{f3} is a factor that takes account of inaccurate assessment of the effects of loading, unforeseen stress distribution in the structure and variations in dimensional accuracy in construction. γ_{f3} shall normally be taken as 1.1 for the ultimate limit state and 1.0 for the serviceability limit state.

2.8. When measurements have been taken to verify the dimensional accuracy and the measured stresses closely resemble the load effects, γ_{f3} can be reduced to 1.05 at the ultimate limit state with the agreement of the NRA.

Partial Factor for Materials, γ_m

2.9. An important feature of the design code is the application of the partial safety factor for material strength, γ_m, to the characteristic values. In assessment, a reduced value of γ_m may be used as an alternative based on the results of laboratory tests.

Limit State

2.10. Although NRA BD 21 specifies that assessments must be carried out at the ultimate limit state; this Standard requires that serviceability limit state checks be carried out in a number of cases. However certain serviceability checks required by the design rules may be waived when permanent deformations are acceptable.

Fatigue

2.11. In assessment, fatigue analysis is not normally necessary. Where the configuration of the bridge is such that fatigue assessment is essential, the loading and the method of analysis shall be as given in BS 5400-10, as implemented by NRA BD 9. For fatigue analysis of shear connectors see also NRA BD 61. Consideration shall be given, however, to determine the remaining life, taking into account the historical damages of the structure, which may be significantly less than that assumed in the design code.

2.12. Where it is not possible to determine stresses accurately by theoretical analysis, fatigue assessment based on actual stress measurements must be carried out with the agreement of the NRA.

Condition Factor in BD 21

2.13. While the application of the condition factor F_c in paragraph 3.18 of NRA BD 21 is not affected in principle by the requirements of this Standard, care should be taken to ensure that the estimated values of F_c do not allow for deficiencies of the materials in a structure which are separately allowed for by using the amended values of γ_m.

3. USE OF APPENDIX A, BS 5400-3 AND NRA BD 13

3.1. Appendix A is presented in the form of add-ons to the design clauses in BS 5400-3 and must be used in conjunction with BS 5400-3 for the assessment of steel bridges. Where reference is made to any part of BS 5400, this must be taken as a reference to that part as implemented by the National Roads Authority.

3.2. The additions have the same clause numbering as that of BS 5400-3.

3.3. Annexes have been termed as Normative and Informative in line with BS 5400-3. Informative annex may be considered as mandatory subject to the agreement of the NRA.

3.4. The design clauses in BS 5400-3 often contain mandatory provisions which must be met in new designs. For assessment such provisions are not always met and alternative provisions are included in the assessment additions.

4. REFERENCES

1. NRA Design Manual for Roads and Bridges (NRA DMRB)

   NRA BD 9 Implementation of BS 5400-10: 1980, Code of Practice for Fatigue

   NRA BD 13 Design of Steel Bridges. Use of BS 5400: Part 3: 2000

   NRA BD 21 The Assessment of Road Bridges and Structures

   NRA BD 37 Loads for Road Bridges

   NRA BD 61 The Assessment of Composite Road Bridges and Structures

   NRA BD 86 The Assessment of Road Bridges and Structures For the Effects of Abnormal and Exceptional Abnormal Vehicles Using SV and SOV Load Models

2. NRA Manual of Contract Documents for Roadworks (MCDRW)

   Volume 1: NRA Specification for Road Works

3. British Standards Institution

   BS 5400: Part 3 Steel, Concrete and Composite Bridges. Code of Practice for Design of Steel Bridges

   BS 5400: Part 10. Steel, Concrete and Composite Bridges. Code of Practice for Fatigue

4. Eirspan Bridge Management System (NRA)

5. ENQUIRIES

5.1. All technical enquiries or comments on this document or any of the documents listed as forming part of the NRA DMRB should be sent by e-mail to infoDMRB@nra.ie, addressed to the following:

"Head of Network Management, Engineering Standards & Research
National Roads Authority
St Martin's House
Waterloo Road
Dublin 4"

……
Pat Maher
Head of Network Management,
Engineering Standards & Research

APPENDIX A AMMENDMENTS TO BS 5400-3:2000 AND ANNEX A OF NRA BD 13 FOR ASSESSMENT

Contents

BD 56/10 THE ASSESSMENT OF STEEL ROAD BRIDGES AND STRUCTURES

APPENDIX A – AMENDMENTS TO BS 5400-3: 2000 AND ANNEX A OF NRA BD 13 FOR ASSESSMENT

1. Scope

Delete the existing text and substitute the following:

This Standard shall be used for the assessment of steel road bridges and their structural components. The assessment additions contained in this document extend the existing Code to cater for the majority of existing steel road bridges.

In assessment, hybrid construction using steel with different grades shall be dealt with by taking due account of the different levels of yield stress in all aspects of the assessment.

2. Normative references

Add at end:

Additional documents are listed in **Annex Z**. These relate to specific documents called up in the added text, as well as listing other background reading useful for the general interpretation of BS 5400-3 in the context of assessment.

3. Terms, Definitions and Symbols

Add new clause 3.2.3

3.2.3 Symbols used in assessment

The main symbols and subscripts used for assessment are generally in accordance with 3.2.1 and 3.2.2. However, some additional symbols are needed for assessment which are defined in the text as they occur.

Delete the existing heading for clause **4** and substitute the new heading.

4. Assessment objectives

4.1 General

Add at end

The loading for assessment of existing bridges shall be in accordance with NRA BD 21, NRA BD 86 and NRA BD 37 as appropriate. The objectives and procedures for assessment of existing bridges shall generally be in accordance with NRA BD 21. The compliance criteria for assessment of structural steelwork in existing bridges shall be in accordance with this part as supplemented by the clause additions for assessment. Where other documents are used for derivation of load effects, analysis or other objectives, the principles and requirements of this Part shall still be applied unless specifically stated otherwise. Inspections for assessment shall follow the recommendations of **Annex I** as well as the "Eirspan Bridge Management System" (NRA).

It should be noted that the ultimate limit state will always need to be checked. The serviceability limit state should also normally be checked for structures built after 1965, but may not need to be assessed for older structures, if agreed with the NRA.

The assessment should determine, in terms of vehicle loading, the carrying capacity of the structure as limited by the critical sections or elements. The assessment loading and associated load factors should also generally be in accordance with NRA BD 21, NRA BD 86 and NRA BD 37, as appropriate.

Assessment resistance should be based on the provisions of the Standard. Assessment live loading can be categorised into full and reduced levels as stated in NRA BD 21.

A convenient way to assess a bridge is to utilise the reduction factors, K, which will also be the ratio of assessment live loading effects to type HA loading effects. (Clearly this procedure cannot be followed if assessment is required to include type HB, STGO and SO vehicle loading effects). This procedure has the advantage that providing basic analyses are carried out separately for dead plus superimposed loading and type HA loading, use of superposition enables K factors to be readily produced. Where necessary, assessment for restricted traffic loadings can also be rapidly produced, as well as reassessment for restricted loadings or possible methods of strengthening. However, the effect of reduced loadings in terms of any non-linear analyses carried out needs to be separately taken into account. Where alternative assessment loadings are being considered, there may be a drawback in using these methods, and where alternative rules are given for assessment these should be used, particularly for initial assessment.

An initial (preliminary) assessment should always be carried out prior to full assessment to determine the criticality of components and thus avoid undue detailed assessment, inspections and analyses on non-critical elements. See further comments in **8.5.1** and **Annex I** in relation to imperfections and inspection.

4.2.2 Serviceability limit state

Add the following NOTES under Table 1:

NOTE 1. Clauses **14.2.3** and 14.5.4.1.2. When calculated deflections due to bolt slip do not cause unserviceability (see 4.2.2) the serviceability limit criterion need not apply.

NOTE 2. GENERAL
Further cases, where additional serviceability checks are required according to individual assessment circumstances, are set out in the relevant clauses.

The serviceability limit states for steel bridges as defined in **4.3** of BS 5400-1 and **4.2.2** of BS 5400-3 are in general terms. The level at which there would be a loss of utility or public concern or excessive permanent deflection, as defined, needs to be set down and agreed with the NRA.

The particular requirements of individual assessments may either demonstrate the need for more specific serviceability checks or the possibility of accepting some levels of unserviceability depending on user requirements and individual circumstances. Serviceability criteria and the checks required should be agreed with the NRA following the initial assessment (see further guidance in each relevant section).

Table 1 and the assessment notes indicate where serviceability checks are required, the following aspects of which should be considered:

9.2.3.1(a) The value of the ratio between maximum and mean stress in particular will generally not be applicable and serviceability checks may be required for significantly lower ratios, (see 9.2.3 and use of Ψ_R). The intention of the check is to ensure that outer parts of wide flanges do not yield under SLS conditions with consequent loss of stiffness. For stiffened compression flanges this also serves as a control of premature buckling of the outermost stiffeners which have been designed elastically. The redistribution capacity of stiffened flanges cannot be simply determined even for compact sections. With possible lower ratios between $\gamma_{fL}\gamma_{f3}$ at ULS and that at SLS the serviceability check is even more necessary (see further guidance in **9.2.3.1**).

9.2.3.1(b) & 9.5.5 This is intended as a control on permanent deformation under SLS conditions. Clearly the amount of permanent deformation will depend on the proportions of a beam. **9.5.5** limits the strain allowed in the tension flange at ULS to twice the yield strain. With ratios between $\gamma_{fL}\gamma_{f3}$ for the two limit states (i.e. ULS/SLS) greater than 1.3 there should be no yielding at the SLS in a particular beam. Even in extreme cases the limitation on flange strain at the ULS should serve to restrict permanent deformation at the SLS to a fraction of the elastic deflection. In a practical case with non-uniform bending moment, yielding would extend over only part of a span. Therefore the use of the limit in assessment can in some cases be waived.

9.2.3.1 (c) & 9.10.3.3 In assessment of the adequacy of existing beams, compliance with these aspects is only necessary when permanent deflections of the order of up to the elastic deflections under SLS loading would be unacceptable. The limit to deformation of a deck plate is commonly set by criteria related to the performance of surfacing. Permanent rutting could necessitate resurfacing. **9.10.3.3.1** deals with a loading condition not treated at ULS and in consequence the serviceability check of **9.10.3.3** should be undertaken.

9.9.8 & 9.2.3.1(d) If the shape factor, S, is less than the ratio between $\gamma_{fL}\gamma_{f3}$ for the ULS and SLS respectively there may be no need for a SLS check for steel beams. The criteria of **9.9.8** enable this to be checked. This may not be the case in assessment if γ_{fL} at ULS is reduced from the normal design values, and assessment at the serviceability limit state should be applied in such cases. (See also comments for **9.5.5** above.) This does not apply to composite beams for which NRA BD 61 applies.

12.2.3 Permanent strains due to secondary stresses are unlikely to cause permanent deflections of a bridge but they could cause buckling of non-compact sections. The check serves to avoid this (see further guidance in **12**).

14.2.3 & 14.5.4.1.2 When deflections resulting from bolt slip are shown to have no adverse effects the criteria are waived (see further guidance in 14.

4.3 partial safety factors to be used

Add the following text under (a) in Table 2:

Structural Components and Behaviour	Clauses	γ_m
Compression members	10.6.1.1 10.6.3	$\mathbf{0.95 + \frac{1.8}{(L/r + 5)}}$ but not greater than 1.05

Add at end:

Where alternative methods of calculating strength or resistance are used the value of resistance shall be taken as:

[the predicted resistance]/$\gamma_m\gamma_{f3}$

where

γ_m in Table 2 is replaced by:

$$\gamma_m = (1.05 + 26.5{m_{cv}}^2)m_{mean}$$

m_{mean} = $m_{tests} + m_{st}.k$

m_{cv} = m_{st}/m_{tests}

m_{tests} = the mean value of the ratios for each test between the resistance predicted using the proposed method and the measured resistance.

m_{st} = the standard deviation of the ratios for each test between the resistance predicted using the proposed method and the measured resistance.

k = A correction factor obtained from Table 4.3A in which n is the number of tests.

n	**2***	**3***	**4***	**5**	**6**	**7**	**8**	**9**	**10**	**11**
k	4.47	1.69	1.18	0.95	0.82	0.73	0.67	0.62	0.58	0.55

n	**12**	**13**	**14**	**15**	**16**	**17**	**18**	**19**	**20**	**21**
k	0.52	0.49	0.47	0.45	0.44	0.42	0.41	0.40	0.39	0.38

n	**22**	**23**	**24**	**25**	**31**	**41**	**61**	**121**	∞
k	0.37	0.36	0.35	0.34	0.31	0.26	0.21	0.15	0

NOTE: * The use of less than five tests is not recommended

Table 4.3A Sample standard deviation correction factor k

4.3.3 Values of partial factors

For purposes of assessment, alternative methods of calculating strength or resistance of elements may be used provided that the results of an adequate number of representative laboratory tests are performed to enable the statistical relationships between the strength or resistance by the alternative methods and that observed to be obtained. The tests should encompass elements having dimensional parameters of similar size to those for the parts to be assessed. Consideration should be given to compatibility of loading and support conditions, to the effects of imperfections or eccentricities and to material properties. The additional section provides the derivation of safety factors for cases, where methods of prediction of strengths of elements differ from those used in the Code. Such alternative methods and their associated equations might offer advantages in instances in which more recent research may lead to improvement in prediction.

The test results with which any method is compared may be either those used in the calibration of the rules in the Code or more recent. To provide a significant benefit at least five relevant test results should be available, excluding any "outliers".

The tests used for the comparisons should be representative of the loading and support conditions for the components to which the method is to be applied and the test specimens should have compatible dimensional parameters (such as slenderness). The relevant material properties (such as yield stress) should be obtained for the components of the specimens and allowed for in the theoretical or empirical predictions.

For elements where the strength is influenced by residual rolling or welding stresses the size and fabrication procedures of the specimens must be similar to those of the elements being assessed. For models of failure in which geometric imperfections are important all such relevant imperfections in the specimen should be recorded and allowed for in the prediction method used, together with the actual cross sectional dimensions.

4.5.1 General

Add at end:

Where an existing bridge has inaccessible surfaces and does not comply with **4.5.5.1** or **4.5.5.2** as appropriate an assessment of any existing corrosion losses at the inaccessible surfaces shall be made in accordance with **Annex I** and either allowance be made in strength assessment for existing and future losses in accordance with **8.7** or remedial action taken to reinforce the damaged part and to reliably protect it against corrosion.

No allowance need be made for corrosion in carrying out the global analysis to determine the moments and forces in the structures.

4.5.2 Provision of drainage

Add at end:

In assessment of existing sealed box members and other hollow sections checks shall be undertaken to determine whether water has collected in them. Water shall be drained.

Water has been found to collect in nominally sealed members, possibly due to condensation from air passing through small welding pores. This can cause bursting due to freezing and internal corrosion. If water is detected its points of ingress should be investigated and sealed after draining.

4.5.3 Sealing

The first two paragraphs are not applicable to assessment.

4.5.4 Narrow gaps and spaces

Not applicable to assessment.

5. Limitations on construction and workmanship

5.1 Workmanship

Add at end:

In the assessment of existing structures allowance shall be made for geometric and other imperfections in accordance with **8.5**.

5.2 Robustness

Not applicable to assessment.

5.4 Composite steel/concrete construction

Add at end:

In the assessment of bridges of such construction composite action shall be assumed only when the strength of the shear connection between the materials complies with the relevant ultimate limit state provisions of NRA BD 61 and the strength of the concrete parts using NRA BD 44.

5.5 Built-up members

Add at end:

In the assessment of such members which do not comply with the design standard, the connections of their elements shall comply with **14**.

5.6 Diaphragms and fixings required during construction

Add at end:

In the assessment of existing structures the possible effects of any residual defect or other permanent change resulting from the removal of temporary attachments shall be taken into account.

Construction diaphragms and fixings can cause stress raisers with the consequent potential risk of brittle fracture and fatigue. Even if they have been removed it is possible that they may still cause adverse effects.

5.7 Camber

Not applicable to assessment.

Whilst camber is not applicable to the assessment, attention is drawn to the fact that the actual shape to the structure could influence the clearance gauge.

5.9 Support cross beams

Add at end:

Where in an existing bridge, a deck is supported on cross beams and also directly on one or more supports at a pier or abutment, due account shall be taken in the analysis of the total support system and any restraints which it provides.

6. Properties of materials

6.1.1 Performance

Not applicable to assessment.

6.2 Nominal yield stress

Delete the contents of the existing Clause and substitute as follows:

The nominal yield stress for assessment of existing bridges shall be derived in accordance with **Annex H**.

The values of nominal yield stress given in **6.2** allow for the tolerances in thickness for rolled materials and provide consistent characteristic values of the ratio of the product of yield stress and thickness to that of nominal thickness and specified minimum yield stress. For purposes of assessment of critical components in existing structures, nominal measured material thicknesses should be used where possible. It is appropriate for such components to use either the specified minimum yield stress or the yield stress determined by test results without reduction to allow for thickness variability.

The methods given in **Annex H** for deriving the assessment yield stress depend on the extent of knowledge of the origin and properties of the steel used in a structure and should be applied only in the appropriate circumstances. They may offer advantages for recent structures when there are several relevant mills' test certificates showing a mean strength substantially greater than the specified minimum.

The statistical equation in **H.4.1 (a)** (ii) of **Annex H** is based on the assumption that the coefficient of variation of yield stress of parts of the same product type, and from one case of recent UK structural steels, is 6.4%. It is derived by use of a one-sided confidence interval calculation as described in BS 2846: Part 2: 1981, using a 95% confidence interval. However, owing to the uncertainties involved in assessing population statistics from small numbers of samples, the equation will not provide a benefit unless the mean yield stress is relatively high and/or many relevant test results are available.

The alternative given in **H.4.1 (c)** (iii) is also applicable when the origin of the steel is unknown. That method is based on that described in BS 2846: Part 3: 1975 Table 7 in which two alterations are made:

(i) a factor of 2/1.65 is introduced to allow for the overestimation of the static yield stress due to the high strain rates used in mill testing; and

(ii) a reduction factor is introduced to apply when the variability in the yield stress exceeds that of current UK structural steels in order to avoid modification to the partial safety factors in **4.3**.

The method requires no prior knowledge of the coefficient of variation but may produce pessimistic values when few results are available having a high coefficient of variation. In such circumstances the value of this coefficient of variation judged as the maximum credible may be used instead of the value from the tests.

It is to be noted that for the statistical analysis to be valid the specimens tested must be taken from components considered likely to have been supplied from the same source as the component being assessed. The tests must be undertaken on material from the relevant part of the cross section (e.g. flange when assessing flange strength) at the locations defined in BS 4360.

The greatest benefit may be expected to result from testing material taken from a critical component, but this may seldom be practical or desirable.

In the absence of knowledge of the specification or test data related to the steel of a component, assumptions may be made as to the worst credible yield stress being the value judged to be the least that the actual yield stress would have. It should be assumed that the steel is of the weakest grade of structural steel in use at the

time of construction and account should be taken of the sensitivity of the strength of the component to the value of yield stress, (see also Reference 6.2.4).

6.3 Ultimate tensile stress

Add at end:

The ultimate tensile stress of tension elements and their connections of steel not complying with IS EN 10025, BS 4360, BS 15 or BS 968 shall be established from mill test certificates or by tests on samples of the materials of the elements. The values of the ultimate tensile stress for assessment of existing structures shall be derived from the test data as for the values of yield stress in accordance with **Annex H**.

Where a plastic method of analysis is used in assessment in accordance with **7.5** the steel in the parts assumed to have plastic capacity shall either comply with IS EN 10025, BS 4360, BS 15 or BS 968 or shall have ultimate tensile stress not less than 1.1 σ_y.

Where σ_y is the nominal yield stress derived in accordance with **Annex H.**

The available data shows that, for particular samples of BS 4360 structural steels, the coefficients of variation of yield stress and of ultimate stress are similar. Thus, the assumptions made regarding the variability of yield stress are a reasonable basis for determining ultimate stresses.

Alternatively, the ultimate tensile stress may be approximately assessed by means of hardness test.

6.4 Ductility

Add at end:

Where a plastic method of analysis is used in accordance with 7.5 or where the plastic moment capacity of a compact section is utilised or redistribution of tension flange stresses is assumed, the ductility of the steel shall be not less than the equivalent to an elongation of 15% on a gauge length $5.65\sqrt{S_o}$, where S_o is the original cross sectional area of the test piece. In addition where a plastic method of analysis is used the strain at the ultimate tensile stress shall be taken at least 20 times the strain corresponding to the yield stress.

The Code makes the general comment that ductility should be not less than 15% on a gauge length of 200mm, plus the extra requirement that the ductility should be not less than BS 4360 values where plastic methods of design are used.

In addition where plastic methods of global analysis are used, an adequate yield plateau has to be proved. This may be deemed to be satisfied if the stress-strain diagram for the steel shows that the ultimate strain corresponding to the ultimate tensile stress is at least 20 times the yield strain corresponding to the material yield stress.

The Code requires, without exception, that parts subject to tensile stress must have a certain notch toughness in impact test carried out at the minimum effective temperature (or 5^oC below for parts resisting expansion).

Earlier bridge design codes had lesser requirements, and sometimes none at all, for notch toughness. The majority of bridges built before about 1970 therefore have, by today's standards, either inadequate or unknown-and- probably-inadequate notch toughness. These bridges have experienced low temperatures during service, with or without live load, depending on circumstances, yet there are very few recorded examples of failure due to brittle fracture.

For assessment two categories are foreseen – those which comply with the Code requirements and those which do not. The first is clearly satisfactory in the assessment of the structure. The second category cannot be simply judged unsatisfactory and thus deemed to "fail" the assessment. For example, the form of construction of the bridge may be such that the presence of steel with sub-standard toughness may be

immaterial. There is also a good case for taking into consideration the service history of the bridge and deciding that the structure is satisfactory, albeit subject to some limitation on future loading or possibly subject also to a higher level of inspection.

Additional guidance on assessment and limitations to service loading is given in **6.5.8**

6.5.2 Design minimum temperature

Add at end:

For existing bridges the assessment minimum temperature shall be taken as the design minimum temperature.

6.5.3.5 Rate of loading

Add at end:

When considering impact loading from over height vehicles the value of k_s shall be taken as 1.0 providing that there is at least 5.3m headroom available.

6.5.4 Maximum permitted thickness

Add at end:

In the assessment of existing bridges components of IS EN 10025 or BS 4360 steels having thicknesses not greater than the limiting thicknesses given in Table 3 may be deemed to provide the required energy absorption.

*Add new clause **6.5.5***

6.5.5 Energy Absorption

Unless the provisions of 6.5.4 are adopted the material used to resist the applied tensile stress should be such that:

For type 1, $C_v \geq \sigma_y/355(t/2)$ in joules

For type 2, $C_v \geq \sigma_y/355(t/4)$ in joules

Type 1 – Any part which is subjected to applied principal tensile stress at the ultimate limit state (ignoring geometric stress concentrations) greater than 100 N/mm^2 and which in addition has either

1) Any welded connection or attachment or

2) Welded repair of surface defects and has not been subsequently inspected by crack detection of at least a 10% random sample or

3) Punched holes which have not been subsequently reamed.

Type 2 – All parts subjected to applied tensile stress and which are not Type 1.

C_v is the energy absorption in Charpy V-notch tests defined in IS EN 10025 and carried out at the design minimum temperature U (in joules).

σ_y is the nominal yield stress.

t is the thickness of the part in mm.

Add new clause 6.5.6

6.5.6 Assessment of notch toughness

Where in the assessment of the adequacy of the bridge either the tensile components do not satisfy the provisions of **6.5.4** or the impact energy absorption values for the tensile components are unknown the notch toughness of the material may be determined by testing samples taken from non-critical parts of the components and compliance demonstrated with **6.5.5** as appropriate.

Where the notch toughness of the steel does not meet the requirements of **6.5.5** the service and loading history of the bridge may be taken into consideration with the agreement of the NRA.

Where non-compliance with the requirements of **6.5.5** and **6.5.6** is shown, it may still be possible to deem a bridge satisfactory based on its form of construction, taken together with the then current design codes and steel specifications, and the service history of the bridge.

The NRA should consider this non-compliance in relation to the overall assessment of the bridge and decide whether it is appropriate to seek a Departure from Standard for this particular aspect. Bridges which have been in service for a long period may have sufficient notch toughness to withstand normal traffic. The request for a Departure from this part of the Standard should be accompanied by the following information:

- details of investigations carried out including test results
- the load history e.g. actual abnormal load movements
- the service history e.g. operation at low or very low temperatures
- the details of non-compliant joints
- evidence of cracking at non-compliant joints.

Two categories of risk levels can be identified:

(a) Risk Level 1, which may be deemed satisfactory with no further assessment.

(b) Risk Level 2, for which further assessment is required.

Annex X presents a flow chart (Figure X1) which may be used to determine the Risk Level category applicable to any type of bridge, along with a flow chart (Figure X2) which gives guidance on the action to be taken if Risk Level 2 has been identified.

In addition, consideration may be given to the service history of a bridge, which may enable an assessor to deem it satisfactory even if Risk Level 2, without further tests.

6.7 Modular ratio

Delete the first sentence and substitute the following:

For global analysis of composite bridges the modular ratios as contained in clause **5.3.1** of NRA BD 61 shall be used.

7. Global analysis for load effects

Guidance on analysis of bridges and old forms of construction is given in NRA BD 21 and NRA BA 16.

7.1 General

Add at end:

Alternatively, a plastic method of analysis may be used in the assessment of steel beams in accordance with 7.4.

Add new clause 7.4:

7.4 Construction in stages

When in the assessment of existing bridges the actual construction sequence is known, that sequence shall be used in the analysis. When the construction sequence is not known or is uncertain, a worst possible sequence shall be assumed which leads to maximum effects in the structural element being considered. More than one such sequence may be required for a bridge, each appropriate to different groups of structural elements.

Add new clause 7.5:

7.5 Plastic methods of analysis

If a plastic method is employed it shall take account of all parts of the structure which can participate in the global response and shall be able to follow the progressive development of plastic hinges (in parts which are essentially linear in configuration) and of yield lines. The method shall generally be in accordance with **8.2.1** in BS 5400-1.

Additionally, a plastic method of analysis shall only be used if:

(a) The steel materials satisfy the appropriate requirements of 6.3 and 6.4.

(b) The member cross sections satisfy the requirements of 9.3.8.

(c) The structure is assessed in addition for the serviceability limit state using an elastic method of analysis.

(d) The assessment of supports, supporting structures, webs and connections is based on the most onerous of the load effects derived from plastic and elastic analysis respectively. Where a plastic method is used, consideration shall be given to all adverse patterns of loading and potential failure mechanisms to determine those providing the least safety margins.

(e) Lateral restraint to plastic hinges is provided as required in 9.12.5.

(f) Slenderness of members satisfy the requirements of 9.7.6.

The use of elastic analysis in the design of continuous structures offers the advantages of use of influence lines and superposition and avoidance of the need to consider joint rotation capacity for non-compact slender components. However for bridges of certain configurations, load carrying capacities greater than those based on elastic analysis may be justified. The magnitudes of the advantage of plastic analysis depend on the degree of redundancy in the system and on the serviceability limits set.

Plastic analysis may be allowed in assessments of structures which fail to meet the ULS criteria with elastic analysis. The Code effectively allows partially for plastic behaviour by using the plastic modulus in deriving

sectional strength of compact components. For a beam designed to its plastic capacity at all critical sections for a single load pattern, the elastic moment distribution corresponds to the plastic distribution. However in the assessment of continuous bridges designed elastically it will be uncommon for all critical sections to be fully stressed under the same load pattern.

The definition of compact sections and stocky members in the Code may serve to define those components for which plastic analysis may be used. There would need to be additional safeguards against shear failure before plastic moments were fully developed. Compact stocky beams designed by the use of elastic methods of global analysis may have some reserve of strength which could usefully be taken into account by means of the use of plastic analysis for assessment at the ultimate limit state.

BS 5400-1 allows the use of plastic lower bound methods subject to the following conditions:

(a) The form of construction and the materials have an adequate plateau of resistance. This is ensured by compliance with **6.3**, **6.4** and **9.3.8**.

(b) The structure should not be prone to shake-down under repeated loading – this is safe guarded by the serviceability requirement.

(c) Bending plasticity should not cause deterioration in shear, torsional or axial resistance – the rules for compact sections avoid such effects.

(d) Supports or supporting structures are capable of withstanding loads calculated by elastic methods – this requirement has been extended to encompass webs and connections which may have little capacity for redistribution.

(e) Changes in geometry due to deflections will not influence load effects – by confining the plastic analysis to beams such changes at the ultimate limit state do not need to be considered.

Plastic method of global analysis is not permitted for composite bridges, see NRA BD 61.

*Add new clause **7.6**:*

7.6 Membrane action

Membrane action may be considered for accidental wheel loads to central reserves, outer verges.

8. Stress analysis

8.2 Allowance for shear lag

Add at end:

For composite bridges relaxation in ψ values as given in **5.2.3.1** of NRA BD 61 shall be used.

8.3 Distortion and warping stresses in box girders

Add at end:

Where the stiffness does not comply with the requirements of **Annex B** distortional and warping stresses shall be calculated (where required by **9.2.1.2**) by means of analysis of a finite element plate model of the box girder and its diaphragms of sufficient extent to ensure that the effects calculated are insensitive to assumed end conditions.

8.5 Imperfections

The assessment additions provide a basis for allowing for measured geometric imperfections in calculating load effects and strengths. The need to accurately allow for such imperfections will depend on the sensitivity of strength predictions to their magnitudes due to the structural configuration (particularly in relation to slenderness parameters) and on the potential benefits of reducing allowance.

In deciding on the criticality of components in accordance with **I.2** of **Annex I**, the strengths of which are influenced by imperfections, a preliminary assessment should be made of the differences between predicted strengths using values of imperfections of one half and twice the tolerances given in BS 5400-6. When it is apparent that the adequacy of any component depends on its actual imperfections or when preliminary inspection has indicated relatively large imperfections, accurate surveys should be carried out where possible in accordance with **Annex I**.

Due account should be taken of likely inaccuracies in the surveys and values of imperfections used in subsequent assessment should include an allowance for such inaccuracies.

Where surveys are impractical the worst credible values of imperfections should be assumed making use of remote visual observations or experience with other similar structures or any other available information.

8.5.1 Imperfections allowed for

Add at end:

For bridges which do not comply with the specification requirements of BS 5400-6 and BS 5400-9, bearing misalignment, errors in level, bearing inclination and imperfections in flatness and straightness shall be determined by inspections when required and as described in annex i and taken into account in strength assessments. Where these are within the tolerances set in BS 5400-6 or BS 5400-9, as appropriate, design strengths given in BS 5400-3 shall be used in assessment.

For parts having measured imperfections beyond the above tolerances, their magnitude shall be taken into account in strength assessment where explicit provision is made in the assessment additions for doing so or their strength and stiffness shall be assumed to be zero where explicit provision is not made in the assessment additions. Values of imperfections less than the tolerances may be taken into account when this is significantly beneficial.

Where the imperfections are to be taken into account in assessment, they shall be assumed to be 1.2 times the measured imperfections to allow for inaccuracies of measurement. This factor of 1.2 is embodied into the relevant assessment additions, and should only be varied with the agreement of the NRA where the nature of the survey so warrants.

8.5.2.1 Torsionally stiff girders

Add at end:

For assessments, imperfections in common planarity of bearings shall be assumed to be 1.2 times the tolerances specified for a bridge or 1.2 times the imperfections recorded in as-built information. In the absence of such specification or records, the imperfections shall be measured during preliminary inspections as described in **Annex I** and adopted in analysis of load effects.

8.5.2.2 Columns

Add at end:

For assessments all eccentricities of rocker bearings to the axes of columns shall be measured during detailed inspections as described in **Annex I** and the measured values allowed for in assessments of column strengths.

Add new Clause 8.5.2.3:

8.5.2.3 Other imperfections

Where inspection reveals detrimental imperfections or effects other than those described above then due allowance shall be made in the calculations for assessment in accordance with 8.5.1 and **Annex I**.

Guidance on other imperfections is given in the Highways Agency Inspection Manual for Highway Structures. In particular for steel bridges these may include:

(a) Local damage to members

Accidental impact may have caused local damage such as distortion of beam flanges. These should be examined for presence of sharp notches, evidence of cracking, or curvature beyond twice the material thickness. For compression elements the remaining effectiveness of the section should be considered.

(b) Differential settlement

Where there is evidence of differential settlement having occurred then monitoring of such movements should take place over a period of time to determine the rate of settlement or whether seasonal movements are involved. Differential settlement may be evident by observations of:

(i) deformation of cracking in finishes;

(ii) tilting of supports; and

(iii) departures from even road profiles.

It is possible that there could be an apparent differential settlement between supports as evidenced from measured levels compared with the profile specified or assumed at the time of construction. If the steelwork during its erection had as is usual practice been adjusted to suit any discrepancies to support levels, e.g. at the site splices, then the effects of such apparent differential settlement may not be present. Ideally the as-built levels should be obtained but if such information is not available then the levels specified at the time of construction should be assumed. If no levels are available from the time of construction or since, then the assessment of any differential settlement should be based upon any evidence of movements or departures from an assumed original profile.

Add new clause 8.7:

8.7 Variations in structural dimensions

Measured section sizes shall be used in the assessment of strength of all critical sections, see **Annex I**. Due account shall be taken of any existing or projected future losses of section due to corrosion in accordance with **4.5.5**. No changes are to be made to partial safety factors when using the measured dimensions.

Where it is impossible or impracticable to measure the actual dimensions of sound steel remaining in a corroded section an estimate should be made based on the original nominal dimensions minus a loss derived from an assumed rate of corrosion where loss of section may continue (e.g. in unpainted non-corrosion resistance steel). Allowance for such future loss should be made in assessment. In the absence of other information the annual rates of corrosion at any surface of a section may be assumed to be equal to the extra thicknesses required under **4.5.5.1** divided by 240.

Attention is drawn to the possibility that deep pitting corrosion may reduce not only the static strength of an element, but also its toughness and fatigue life.

Add new clauses 8.8, 8.8.1 and 8.8.2:

8.8 Originally unintended composite action

Stiffnesses and strengths calculated for steel sections not originally intended as acting compositely can be enhanced by consideration of composite action with adjacent or surrounding structure with appropriate reference to NRA BD 61

8.8.1 Cased beams or filler beams or jack arch decks

For cased beams and concrete filler beams the stress analysis shall be based on composite properties to Clauses **8.1**, **8.2**, **8.3**, **8.4**, **8.5.1** and **8.5.2** of NRA BD 61 where there is no evidence of excessive corrosion, fretting action or cracking sufficient to adversely affect the achievement of composite action.

8.8.2 Concrete slab and steel beam decks

For concrete slab and steel beam decks global and stress analysis using composite properties shall be carried out using NRA BD 61.

9. Design of beams

9.2.3 Serviceability limit state

Studies have shown that the limiting value of ψ may be typically less than $0.77(\sigma_{max} > 1.30\sigma_{av})$, for which the SLS check governs, particularly in cases where γ factors at ULS are reduced for such items as superimposed loads where surfacing thicknesses are known and where dead load effects are relatively high in proportion to live load effects.

Both of these aspects are likely to be extremely common in the Assessment, i.e.,

(a) Surfacing and other superimposed loads will be known and the reduced values of 1.2 (ULS) and 1.0 (SLS) will be in common use, rather than 1.75 (ULS) and 1.20 (SLS) used in design.

(b) When assessing to reduced live loadings, the proportion of live load in the total is reduced to that used in design to full live load conditions.

Further to this, part of the Assessment procedure involves deriving new factors for assessment; these are also likely to vary the effects between ULS and SLS and involve another correction (c) to the above. Varying material factors for Assessment will also modify the relation between ULS and SLS, though in this case a counter balancing effect may be present if high ULS factors are adopted to allow for "deterioration" or other aspects.

The typical value referred to above is equivalent to

$\gamma_{f3}\gamma_m\gamma_{fL}$ $= 1.1 \times 1.05 \times 1.125$
$= 1.3$ (i.e. limiting $\psi = 0.77$)

9.3.2.1 Flange outstands in compression.

Add at end:

See **9.3.1** for assessment of non-complying outstands in compression.

Although a limit may be desirable for new structures to assist in avoiding wide outstands which may be prone to welding distortion by fabrication and to accidental damage, there appears to be no reason to downgrade strength if such limit is exceeded for assessment. It appears unlikely that the limit will actually be exceeded because of its historical use.

9.3.3.1 General

Add at end:

Openings rounded with a radius of less than ¼ of the least dimension of the hole, or any openings not complying with any of the requirements of **9.3.3.2**, shall be inspected individually for evidence of cracking. They shall be assessed for the effects on fatigue life and brittle fracture propensity of stress concentrations. Detailed local analyses, e.g. finite element analysis, shall be carried out where appropriate.

9.3.4.1.1. General

Add at end:

See **9.3.1** and Annex S for the assessment of non-complying stiffener configurations. Shapes of stiffeners other than those specified shall be assessed on the basis of the nearest standard shape.

Open stiffeners of forms other than those described in **9.3.4.1.2 – 9.3.4.1.5** have been used in the past; for example channel stiffeners were frequent in the days of riveted construction, with one flange riveted to the parent plate. In such cases it should normally be possible to replace the actual stiffener with an equivalent standard shape

9.3.4.1.3 Bulb flat stiffeners

Add at end:

For assessment, the requirements in this sub-clause do not apply; **Annex S** shall be followed.

9.3.4.1.4 Angle stiffeners

Add at end:

For assessment, the requirements in this sub-clause do not apply; **Annex S** shall be followed.

9.3.4.1.3 and 9.3.4.1.4

Note that existing bulb flat and angle sections need not necessarily comply with IS EN 10067. The requirement can be omitted for assessment.

As examples:

(a) A channel riveted or bolted to the plate through a flange may be replaced by an equivalent angle comprising the web and other flange of the channel. The connected flange of the channel may, of course, be considered in the effective section for stress analysis but should be ignored for checking limitations on proportions.

(b) An angle or bulb angle riveted or bolted to the plate through a flange may be replaced by an equivalent flat or bulb flat comprising the remaining flange and bulb (if any).

(c) Where a stiffener of any shape is cleated to the parent plate, the cleat should be ignored and the assumption made that the stiffener continues to (and is connected directly to) the plate. Where this proves unduly onerous, a more precise method of treatment may be considered.

9.3.4.2 Closed stiffeners to webs and compression flanges.

Add at end:

See **9.3.1** and **Annex S** for the assessment of non-complying stiffener configurations. Shapes of stiffeners other than those specified shall be assessed on the basis of the nearest standard shape.

Add new clause 9.3.4.3:

9.3.4.3 Combinations of closed and open stiffener

A stiffener fabricated from a combination of closed and open sections shall be proportioned such that individual components meet the requirements of **9.3.4.1** or **9.3.4.2** as appropriate.

When an element is not connected directly to the parent plate, no benefit shall be assumed from the restraining effect of the parent plate when using **Annex S** or any other method.

This is intended to cover, for example, the case of "wine-glass" stiffeners (see Figure 1A). In this case the tee portion is not connected directly to the plate and hence no advantage can be taken of the restraining influence of the plate. This means that the option to use Figure 4(b) is not available (or at least b must be assumed to be very large which effectively limits

$$\frac{h_s}{t_s}\sqrt{\frac{\sigma_{ys}}{355}}$$

to 7 unless a higher value can be obtained from Figure 4(a)).

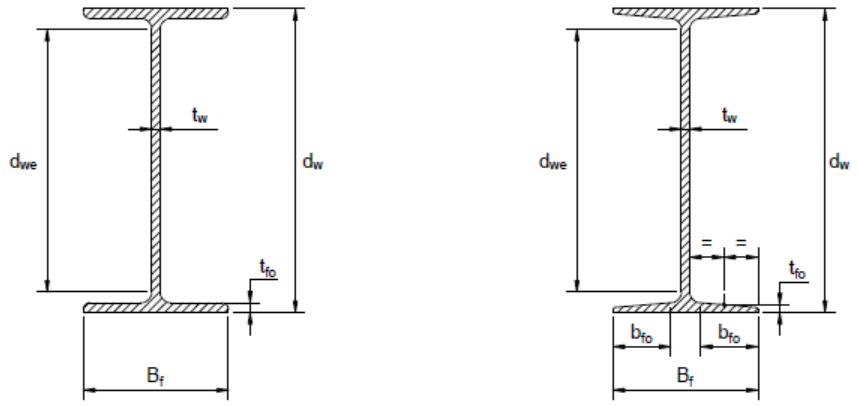

BEAM WITH PARALLEL FLANGES

BEAM WITH TAPERED FLANGES

(a) Rolled Beam Section

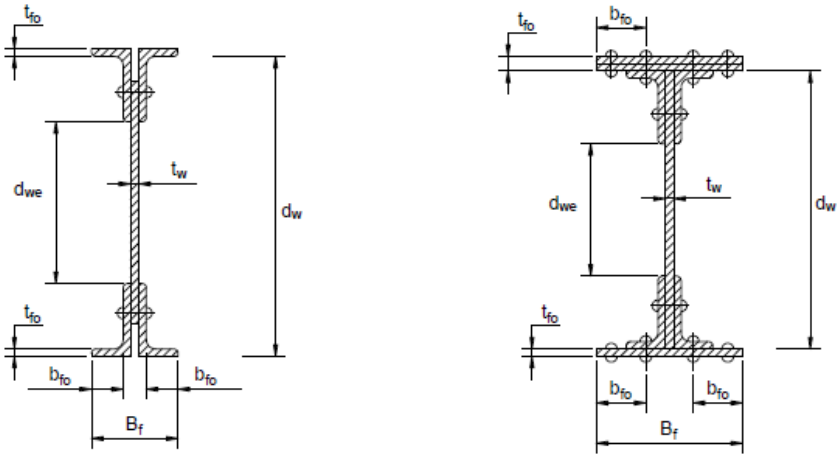

BEAM WITH FLANGE ANGLES WITHOUT FLANGES

BEAM WITH FLANGE ANGLES AND FLANGES

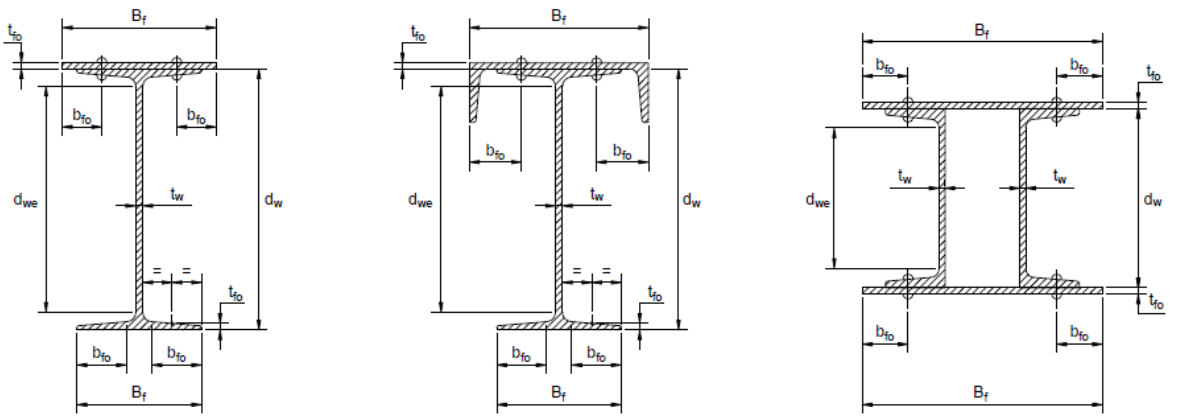

ROLLED BEAM WITH TAPERED FLANGES AND FLANGE PLATE

ROLLED BEAM WITH TAPERED FLANGES AND CHANNEL PLATE

ROLLED CHANNELS WITH FLANGE PLATES

(b) Fabricated seam sections

Figure 1A: Geometric notation for sections that may be encountered in assessment

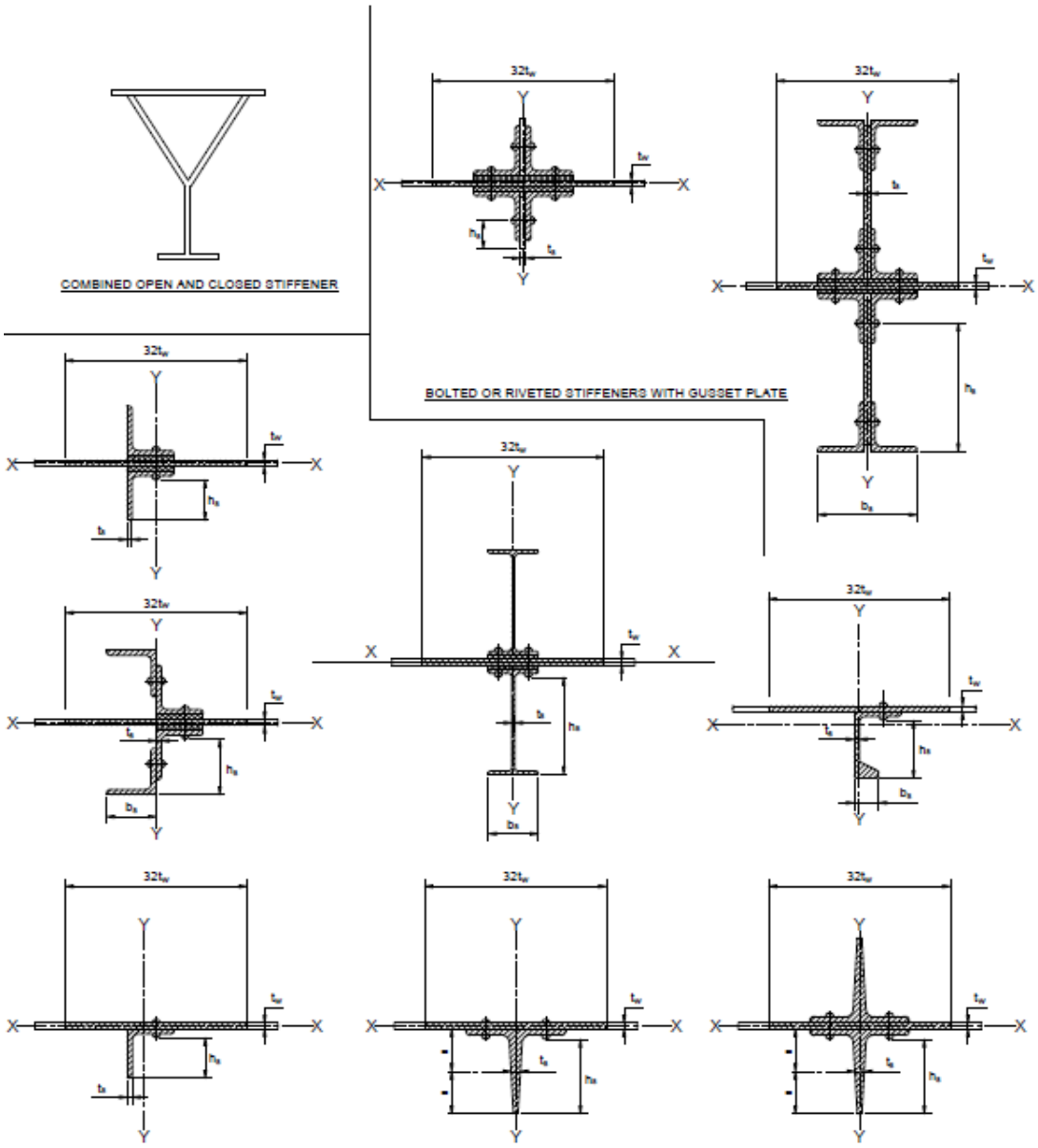

(c) Flange plate and web stiffeners

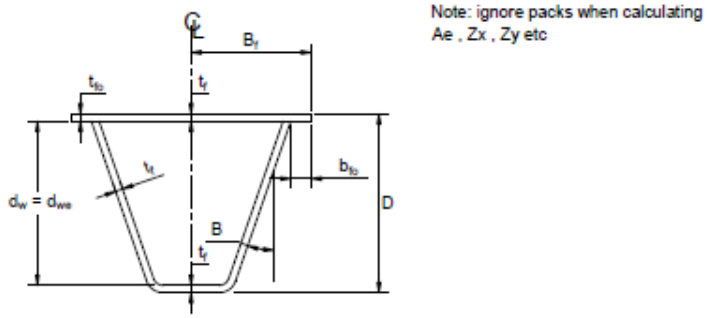

(d) Bent trough and plate

Figure 1A (continued): Geometric notation for sections that may be encountered in assessment

9.3.5 Flanges curved in elevation

Add at end:

Assessment of flanges curved in elevation but not complying with the above shall be analysed in detail allowing for the effects of curvature on the stability of the elements.

9.3.6 Circular hollow sections

Add at end:

See **9.3.1** and **Annex S** for the assessment of non-complying sections.

9.3.7.1 General

Add at end:

Where any part of a cross section fails to comply with the appropriate requirements the complete section shall be assessed as non-compact.

9.3.7.2 Webs

Rules in line with IS EN 1993: Part 1 using the depth of plastic neutral axis have been provided. Sections which satisfy the design rules are classified as compact.

Add new clauses 9.3.8 and 9.3.8.1, 9.3.8.2, 9.3.8.3 and 9.3.8.4

9.3.8 Plastic sections

9.3.8.1 General

The use of plastic sections and analysis shall be in accordance with 7.5. Plastic sections are those which possess adequate ductility to enable them to carry the full plastic moment whilst allowing rotation at a plastic hinge to occur. Rolled or fabricated I-beams, channels and hollow sections can be taken to have plastic sections provided that:

(a) They meet the limitations of shape defined in **9.3.8.2** to 9**.3.8.4.**

(b) The steel materials satisfy the requirements of **6.3** and **6.4**.

Longitudinal stiffeners, if any, shall be ignored in calculating the section properties and in deriving the strength of a beam.

All parts of the cross section including stiffeners shall comply with the appropriate requirements.

9.3.8.2 Webs

The depth d_1 between the plastic neutral axis of the beam and the compressive edge of the web shall not exceed:

(a) $\boldsymbol{28t_w\sqrt{\frac{355}{\sigma_{yw}}}}$, if $\boldsymbol{d_t \leq 0.5d_w}$

(b) $\boldsymbol{\left(32 - \frac{8d_1}{d_w}\right) t_w\sqrt{\frac{355}{\sigma_{yw}}}}$, if $\boldsymbol{d_t > 0.5d_w}$

but not less than $24t_w\sqrt{\frac{355}{\sigma_{yw}}}$

where

t_w id the thickness of the web plate

d_w is the depth of the web as defined in Figure 1

σ_{yw} is the yield stress of the web material as defined in **6.2.1**

Generally the rules in IS EN 1993: Part 1 are less severe for Class 1 sections than the rules for compact sections in BS 5400. The one exception is for webs primarily in compression, but with the neutral axis within the depth of the web. As in plastic design, the stress blocks are rectangular rather than triangular, the web will be more prone to instability when the distance from the plastic neutral axis to the compression edge is fairly large. The rules quoted are always more stringent than those in IS EN 1993: Part 1, and follow the Code for $d_1 \leq 0.5d_w$. For larger d_1 there is a linear reduction until the whole web is in compression.

For comparison, IS EN 1993: Part 1 gives 29.3tw for $d_1 \leq 0.5d_w$ falling off (not linearly) to $26.85t_w$ for $d_1 = d_w$. It must be pointed out however, that IS EN 1993: Part 1 defines the depth of the web differently from the Code and in consequence the Figures are not exactly comparable. The necessary correction has been made to allow for the fact that IS EN 1993: Part 1 is based on a yield of 235N/mm^2 and the Code on 355N/mm^2.

9.3.8.3 Compression flanges

Compression flanges shall comply with the provisions for compact flanges given in 9.3.7.3.

In all cases the IS EN 1993: Part 1 rules for Class 1 sections are less severe than the BS 5400 rules for compact sections. Hence the latter have been adopted.

9.3.8.4 Circular hollow sections

The ratio of the outside diameter to the wall thickness of a circular hollow section shall not exceed:

$$33\left(\frac{355}{\sigma_y}\right)$$

where

σ_y is the yield stress of the material of the circular hollow section as defined in 6.2.1.

9.5.6 Transverse stresses in webs

Add at end:

Transfer of load by direct bearing between flange plate and web shall not be assumed in the case of riveted construction unless reasonable evidence of direct contact is available, for example by sight of the end of the beam.

9.6.1 General

Add at end:

Where the resistance of the restraining systems is less than required to resist force Fs under 9.12.5.2.1 then the slenderness parameter λ_{LT} appropriate to the length ℓ_e at the support under consideration, shall be modified as follows:

$$\lambda'_{LT} = \frac{\lambda_{LT}}{\left[\frac{1}{8}\left(\frac{5F_{SD}}{F_S}+3\right)\right]^{1/2}}$$

where

λ'_{LT} is a modified value of λ_{LT}

λ_{LT} is defined in **9.7.2**

ℓ_e is defined in **9.6.2**

Fs is as defined in **9.12.5.1**

F_{SD} if the available resistance which is less than F_S excluding the effects of wind, frictional and other applied forces.

NOTE: Stiffeners at supports should be checked to ensure that they can withstand the applied load effects.

9.6 Effective length for lateral torsional buckling

9.6.1 general

The assessment addition allows for the case where the restraining system at supports does not comply with the strength requirements in **9.12.4**.

9.6.4 Beams with intermediate restraints

Delete NOTE

9.6.4.1.2 Beams with discrete torsional restraints

Replace the definition of ℓ_w by:

ℓ_w is the assumed half-wavelength of buckling. The value of ℓ_w should generally be taken as the span length L. However, to guard against the possibility of a mode of buckling with multiple half-wavelengths within the length L, the limiting moment of resistance M_R in accordance with **9.8** should also be checked considering values of ℓ_w corresponding to sub-multiples of the span L.

Replace the parameter *m* by the parameter *n*, in the definitions of θ_R, θ_{R1}, θ_{R2}.

Replace the parameter *m* and its definition by the parameter *n*, defined as:

n is the number of discrete restraints in the half wavelength of buckling (=1 for a single restraint in the centre of a half wavelength).

Delete NOTE 2, renumber subsequent NOTES.

NOTE 5 (renumbered as NOTE 4). In the expression for θ_{R2}, replace the parameter m by the parameter n and delete the remainder of the sentence after "the spacing of the beams".

9.6.4.1.3A Beams restrained by u-frames

When the end supports in half-through bridges do not provide sufficient torsional restraint the critical buckling stress for the compression flanges may be significantly less than that for rigid supports. Such supports may, for example, consist of U-frames similar to intermediate frames with the posts supported on knuckle bearings.

9.7.2 Uniform I, channel, tee or angle sections

In NOTE 3 in Table 9, replace the expression for ν by:

$$\upsilon = \left[\left\{4i(1-i) + 0.05{\lambda_F}^2 + {\psi_i}^2\right\}^{0.5} + \psi_i\right]^{-0.5}$$

Delete the existing definition for k_4 and substitute the new definitions as follows:

$$k_4 = \left[\frac{4Z_{pe}{}^2\left(1-\frac{I_y}{I_x}\right)}{A^2h^2}\right]^{1/4}$$ for flanged beams symmetrical about the minor axis

$$k_4 = \left[\frac{I_yZ_{pe}{}^2\left(1-\frac{I_y}{I_x}\right)}{A^2C_w}\right]^{1/4}$$ for flanged beams symmetrical about the major axis

= 1.0 for all other beams

C_w is the warping constant and can be taken equal to

$$\frac{d_f{}^2\, t_{ft}\, t_{fb}\, B_{ft}{}^3\, B_{fb}{}^3}{12\,(t_{ft}\ B_{ft}{}^3 + t_{fb}\ B_{fb}{}^3)}$$

Z_{pe} is defined in **9.9.1.2**

A, I_x, I_y are defined in **9.7.3.1**

d_f is defined in **9.9.3.1**

t_f, B_{ft} are the thickness and width respectively of the top flange

t_{fb} B_{fb} are the thickness and width respectively of the bottom flange

h is the distance between the centroids of the flanges

For composite beams in which the area of longitudinal reinforcement in the slab is at least 25% of the area of the steel top flange the value of k_4 may be assumed to be:

$$\left[0.64 - \frac{0.213}{d_f{}^2}B_f{}^2\right]^{1/4}$$, but not less than 0.6

where B_f is the average width of the two flanges, the top flange width being taken as the effective width of the slab.

Add the following **NOTE 3** *at end of the Clause*

NOTE 3: Angle sections used alone as beams are not covered by the above. The behaviour of angle sections is affected by the non-coincidence of the principal U-U and V-V axes

9.7.2 Uniform I, channel, tee or angle sections

The k4 factor (taken on 0.9 for rolled sections and 1.0 for all other beams) is an approximation that is reasonably conservative for design and is a simplification of the factor u given in BS 5950 **Annex B**. The replacement factors that may be used for assessment should be less conservative for general cases of beams symmetrical about either of the main axes and thus be of benefit in assessment. Similarly for rolled sections symmetrical about either of the main axes, the buckling parameter given in published tables may be used in lieu of k_4. The expression given for composite beams has been developed over a practical range of composite sections, and could have a significant benefit for assessment in some cases.

*Add new **9.7.6***

9.7.6 Slenderness limitations for plastic analysis

The slenderness parameter $\lambda_{LT}\sqrt{\sigma_{yc}/355}$ for sections which are assessed using plastic methods of analysis (see **7.5**) shall not exceed 30.

9.8 limiting moment of resistance

Delete the definitions of ℓ_w, ℓ_e, and L.

Replace Figures 11a) and 11b) by those given below (see expressions for curved in **Annex G.8**)

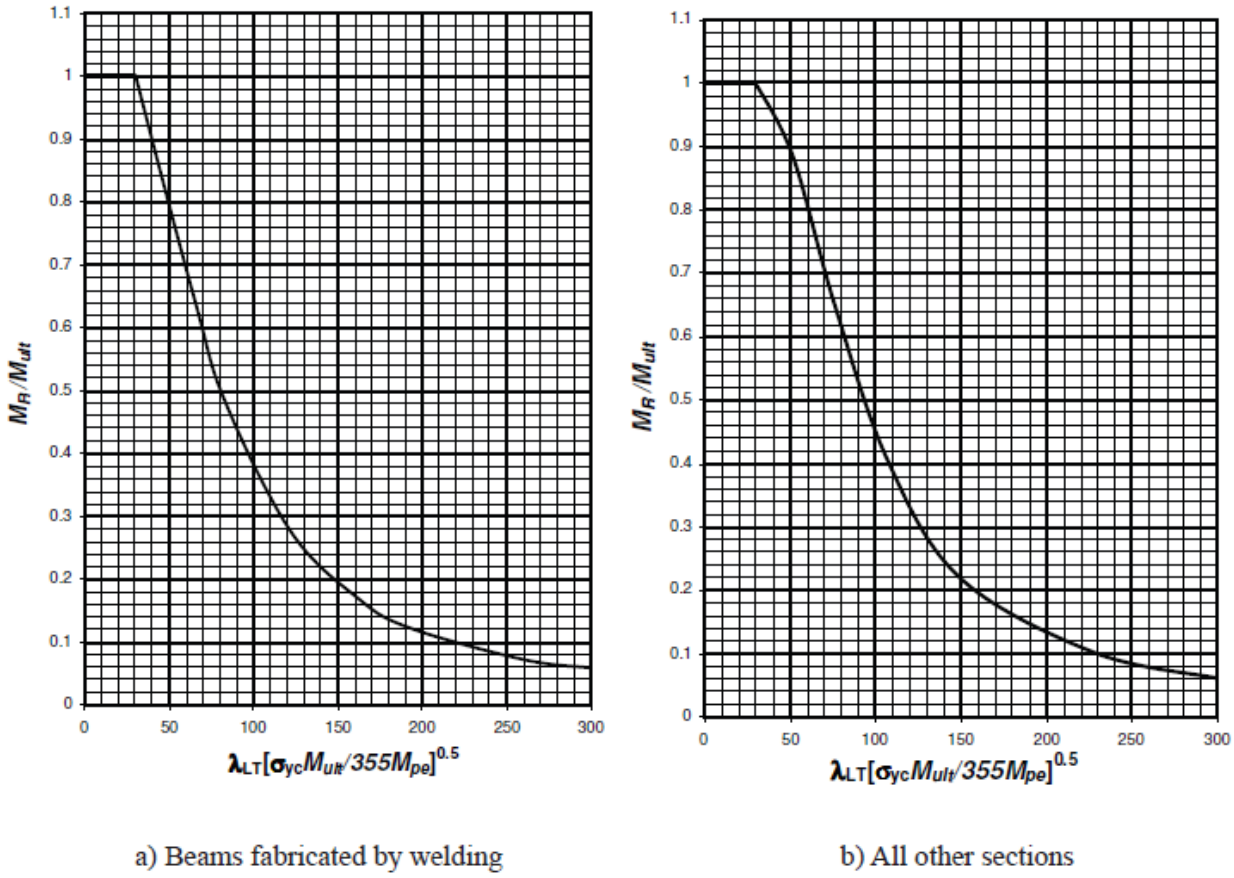

Figure 11: Limiting moment of resistance M_R

Add at end:

Where in assessment the adequacy of a beam allowance is to be made for initial departures from straightness of the flanges Δ_F, measured in accordance with Table 5 of Part 6, M_R/M_{ULT} shall be calculated from the equations in **Annex G8** with η taken as:

$$\eta = 0.008(\beta - 30) + \left(\frac{\beta - 30}{\beta}\right)[1.2\Delta_F - 0.0012\ell]\frac{y}{{r_y}^2}$$

$$\eta = 0.035(\beta - 30) + \left(\frac{\beta - 30}{\beta}\right)[1.2\Delta_F - 0.0012\ell]\frac{y}{{r_y}^2}$$

but not less than zero

where

Δ_F is the greater of the values measured in accordance with 4(a) and 4(b) respectively of Table 5 of BS 5400: Part 6 over a gauge length equal to the length of the beams between points of effective lateral support.

y is the distance in the x-direction from the y-y centroidal axis to the extreme fibre of the compression flange (see Figure 1).

ry is the radius of gyration of the gross cross section about its y-y axis.

ℓ is the gauge length measure Δ_F

9.8 Limiting moment of resistance

The replacement form of the term, η, is based on the equivalent Perry coefficient adopted in the design rules but modified to allow for differences between actual out-of-straightness and the tolerances assumed in the design rules. The formula follows the empirical equation used in the calibration of the design rules against test results as given in **Annex G.8**.

9.9.4.2 Buckling of beam

Add at end:

Alternatively, a uniform beam of I section subject to combined bending and axial compression is deemed to pass assessment if the following criteria are satisfied:

$$\frac{\gamma_m\gamma_{f3}P_{max}}{A_e} + \frac{\gamma_m\gamma_{f3}M_{xmax}}{Z_{xc}} + \frac{\gamma_m\gamma_{f3}M_{ymax}N_y}{Z_{yc}} + \pi^2 E\eta\left(\frac{r_y}{l_e}\right)^2\left(\frac{K_y}{1-K_y}\right) \leq \sigma_{yc}$$

where

A_e is the effective cross sectional area of the beam as defined in **10.5.2**

Z_{xc} is the section modulus with reference to the x-x axis and the extreme fibres of the compression flange.

Z_{yc} is the section modulus with reference to the y-y axis and the extreme fibres of the compression flange.

$$N_y = 1 + \frac{4}{\pi}\left(\frac{K_y}{1-K_y}\right)\left(1+\left(\frac{M_{xmax}}{M_{cr}}\right)v^2\right)$$

$$K_y = \frac{P_{max} l^2_e}{\pi^2 E I_y} + \left(\frac{M_{xmax}}{M_{cr}}\right)^2$$

$$K_p = P_{max}\, l_e^2/\pi^2 E I_y$$

$$M_{cr} = \frac{\pi^2 E\, Z_{xc}}{\lambda^2_{LT}}$$

σ_{yc} is as defined in **9.8**
λ_{LT} is as defined in **9.7.2**
v is as defined in **9.7.2**
l_e is as defined in **9.7.2**

For beams fabricated by welding $\eta = 0.0062\left(\frac{l_e}{r_y} - 15\right)\frac{K_p}{K_y} + 0.008(\beta - 30)\frac{M^2_{xmax}}{M^2_{cr} K_y}\left(1 + \frac{v^2 M_{cr}}{M_{xmax}}\right)$

For all other sections $\eta = 0.0062\left(\frac{l_e}{r_y} - 15\right)\frac{K_p}{K_y} + 0.0035(\beta - 30)\frac{M^2_{xmax}}{M^2_{cr} K_y}\left(1 + \frac{v^2 M_{cr}}{M_{xmax}}\right)$

β is as defined in **Annex G.8**.

9.9.4.2 Buckling of a beam

The alternative criterion has been developed from work on beams subject to thrust and combined bending about the major and minor axes. It has been particularly developed for the most common case of I-beams but may also be applicable to other sections such as hollow sections, channels and possibly T's. However application to other sections will have to be verified.

The method may be less conservative when neither thrust nor bending effects individually are near to their limiting values.

9.9.8 Serviceability check for unsymmetric cross-sections

Add at end:

However in assessment of steel beams where

$$\rho_{ft} \geq 0.064 + 0.008(\rho_D)^2$$

the section need not be checked for the serviceability limit state when the partial load factors as given in BD 37 have been used.

In this expression

ρ_{ft} is the proportion of the sectional area of the tension flange of the beam to the total area of the beam.

ρ_D is the proportion of unfactored dead load i.e. not including superimposed) moments to unfactored total moments.

Where the compression flange area is less than the tension flange area, i.e. in a non-composite stage of construction ρ_{ft} shall be based on the ratio of the compression flange area to the total area of the beam.

The approach empirically allows for the change between load effects and the plastic modulus of the section (and thus stresses) used in the assessment at the ultimate limit state (ULS) and the load effects and elastic modulus of the section (and thus stresses) that would be applied at the serviceability limit state (SLS). By making use of shape factors, load effects and the values of partial load factors in NRA BD 37 the sectional area of the smaller flange can be used to check for the degree of asymmetry of the cross section and show when the serviceability limit state governs with sections of greater symmetry. The expressions have relevant partial load factors (γ_{fL} built in as well as the relevant values for γ_m and γ_{f3}.

Clearly any increase in values of γ_{fL} (or $\gamma_m \gamma_{f3}$) at ULS will only make the need for the SLS check less likely, and the expression can still be used to avoid some unnecessary serviceability checks. However, any decrease in γ_{fL} (or $\gamma_m \gamma_{f3}$) will increase the need for the serviceability checks, and in such cases the SLS check should always be carried out. It is possible that a generalised expression could be developed for application to cases with other values of partial factors, but this would become very cumbersome to cater for all possible combinations that can occur, and would only have limited use.

9.10.2.2 Effective section for longitudinal flange stiffeners

Add at end:

Alternatively, in assessing the adequacy of a stiffener in orthotropic decks the effective sections assumed in calculating the longitudinal stress, σ_a, and the values of λ and η in **9.10.2.3** may be based on modified values of K_c, derived as follows:

(1) For checking against criterion (a) in 9.10.2.3:
σ_a, may be calculated on an effective section obtained using $K_c = K_c'$ where K_c' is obtained b iteration from Figure 5A for the appropriate values of:

$$\lambda = \left(\frac{b}{t_f} \sqrt{\frac{\sigma_{ye}}{355}} \right) \text{ for the plate}$$

and the ratio σ_a'/σ_{ye}, in which $\sigma_a' = K_c' \, \sigma_a \gamma_m \gamma_{f3}$.

The properties of the effective section used to calculate k11 and ks1 may be calculated using $K_c = K_c''$ where K_c'' is similarly obtained from Figure 5B for the appropriate value of γ for the plate and $\sigma_a' = K_c' \sigma_a \gamma_m \gamma_{f3}$.

(2) For checking against criterion (b) in 9.10.2.3 and criterion (c) in **9.10.3.3.2:**
σ_a may be calculated on an effective section obtained by using $K_c = K'_c$ where K'_c is obtained from Figure 5A for the appropriate values of λ for the plate and with the ratio $\sigma_a'/\sigma_{ye} = K_c$ where Kc is as given in Figure 5.

The properties of the effective section used to calculate k_{12} and k_{s2} may be calculated using $K_c = K''_c$ where K_c'' is similarly obtained from Figure 5B.

(3) For checking against criterion (b) in 9.10.3.3.2:
σ_a, σ_{fo} and σ_{fz} may be calculated for an effective section obtained by using $K_c = K'_c$, where K'_c is derived from Figure 5A with $\sigma_a' = K'_c (\sigma_a - \sigma_{fz}) \gamma_m \gamma_{f3}$.

In this case the properties of the effective section used to calculate k_{l1} and k_{s1} should be calculated using $K_c = K''_c$, where K''_c is similarly obtained from Figure 5B.

NOTE: For each of (1) to (3) above K'_c may conservatively taken as K''_c for the appropriate criterion in calculating σ_a and σ_a'.

NOTE: Figures 5A and 5B apply to plates with welded stiffeners having initial out-of-plane imperfections measured after welding equal to the tolerances in BS 5400: Part 6 and may be used when imperfections are less than the tolerances. **Annex P** provides the basis for calculating K'_c and K''_c for any magnitude of imperfection.

The rules for calculation of the effective widths of flange given in 9.4.2.4 were derived so that the compressive strength of plate panel is given by $K_c\ \sigma_y$ x the area of the plate. As a simplification the axial tangent and secant stiffnesses of a panel were also taken as those corresponding to the same effective width. The plate strength effective widths apply to plates having residual stresses equal to $0.1\sigma_y$ and are conservative when applied to the stiffness. Furthermore the axial stiffness is governed by magnification of initial plate deformations by a function of the ratio between the axial stress and the elastic buckling stress, the value of K_c for a given λ corresponding to the attainment of the limiting compressive strength.

The strengths of stiffeners having a large outstand are commonly governed by compressive failure of the outstand (by **9.10.2.3**). In such cases the coincident stress in the plate when yield occurs in the outstand will be less than the average stress on the effective section. In consequence the section properties to be used in assessing strength for outstand failure may be based on plate effective width coefficients relating to a limiting stress on the net section of $\sigma_a\ \gamma_m \gamma f_3$ instead of a plate effective width coefficient K_c which relates to a stress equal to the plate strength, ie $K_c\ \sigma_{yc}$.

The calculations are complicated by the differences between the secant stiffness (related to K'_c) and the tangent stiffness (related to K_c'') and the need for iterative calculations. Since the tangent stiffness is lower it is conservative to use $K'_c = K''_c$ thereby obviating the need for using different section properties to calculate the values of the different parameters.

The plate effective width coefficients have been derived for welded panels having initial out-of plane deformations measured after welding and of magnitude equal to the tolerances in BS 5400-6 and may be used for panels within those tolerances. Reference may be made to **Annex P** for determination of coefficients for plates with deformations outwith the tolerances.

The effective widths are derived for plates unrestrained in-plane along their edges and are consequently conservative for restrained plates.

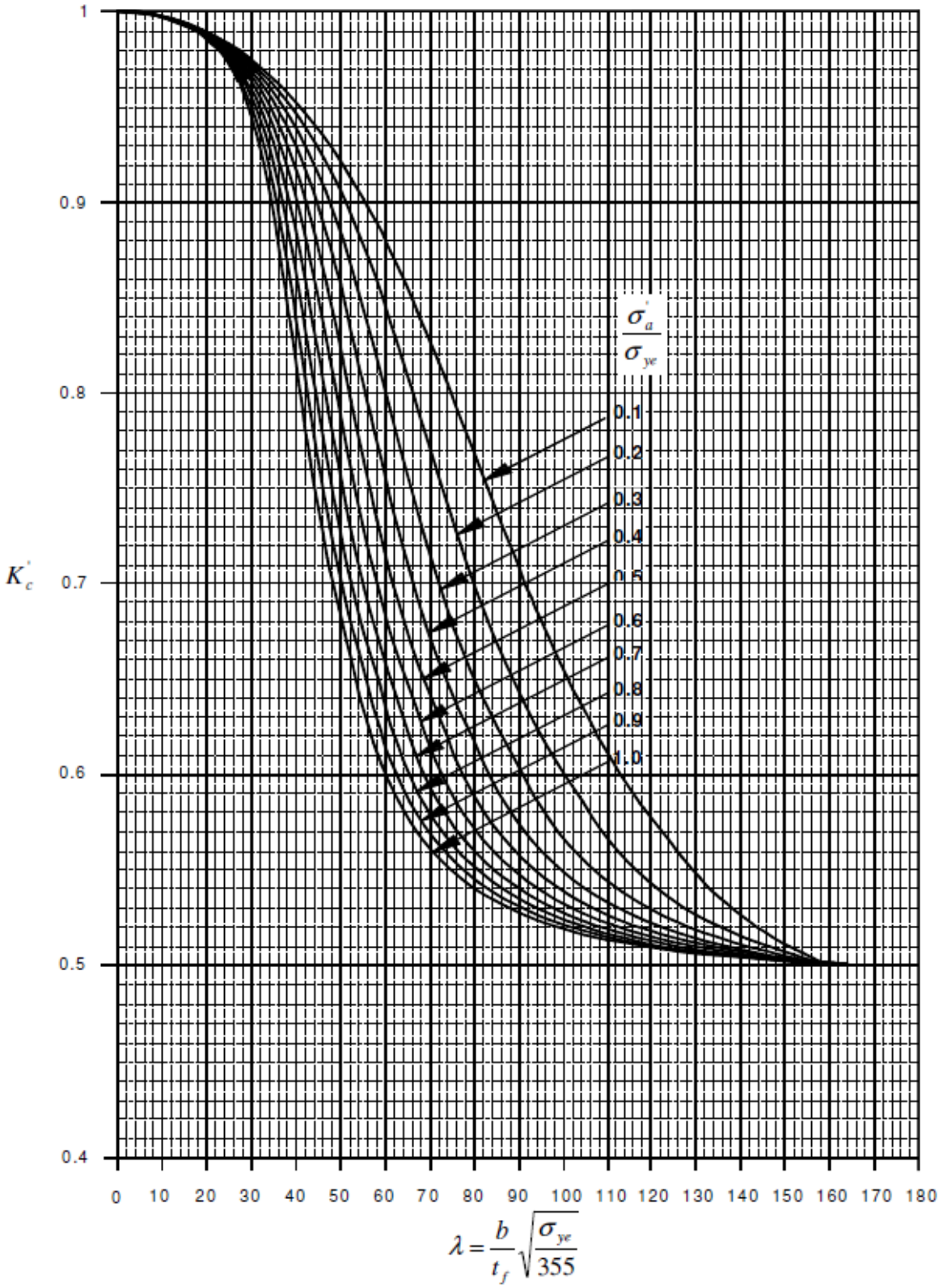

Figure 5A: Coefficient for plate panels under direct compression

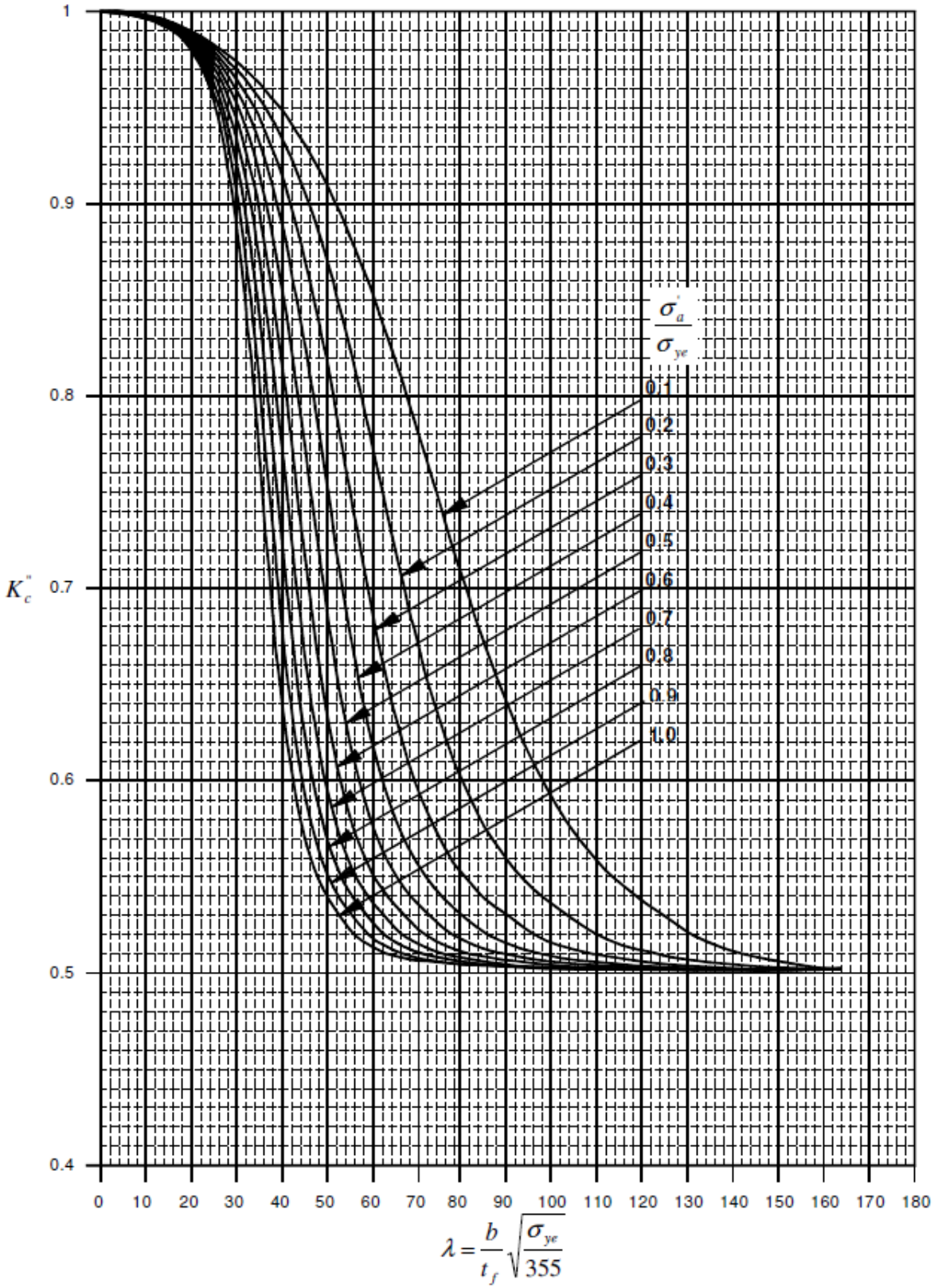

Figure 5B: Coefficient for plate panels under direct compression

9.10.2.3 Strength of longitudinal flange stiffeners

Add at end:

Allowance may be made for orthotropic action of a stiffened flange with or without intermediate transvers stiffeners by replacing r_{se} by

$$r_{se} = \sqrt{\frac{\sigma_{cr1}^{*\prime} l^2}{\pi^2 E}}$$

and assuming $k_{s1} = k_{s2} = 0$

where $\sigma_{cr1}{*}'$ is the modified critical buckling stress derived in accordance with Annex N.

When considering overall buckling of a multi-stiffened panel between its boundaries or between intermediate transverse stiffeners k_{s1} and k_{s2} may be taken as zero.

In addition to the check against buckling in the overall mode, utilising the benefit of orthotropic action in accordance with the above and **Annex N**, additional checks shall be made against potential sub-panel buckling modes to allow for the effects of destabilising stresses in the plate panels in accordance with **N.2** of **Annex N**. In flanges with negligible coincident in-plane shear and transverse stress, the overall mode should govern and the sub-panel buckling checks may be omitted.

Where in accordance with **8.5** assessment is to be based on measured imperfections in straightness of stiffeners l/625 in the equation for Δ should be replaced by 1.2|Δsx|eff where |Δsx|eff is determined from the measurements in accordance with **Annex J**. Where allowance is made for orthotropic action values of Δsx may be measured over a gauge length of l/m when overall panel buckling governs the panel strength or over the distance between intermediate transverse stiffeners when buckling between these stiffeners governs, where m is the number of half wave lengths in the panel length derived in accordance with **Annex N**.

In criterion (b) when modified values of K_c given in **9.10.2.2** are used:

$$\frac{k_{12}\sigma_{ye}}{\gamma_m \gamma_{f3}} \quad \textit{must be factored by} \quad \left[\frac{K_c}{K_c'}\right]$$

and k_{s2} and k_{12} shall be derived from Figure 19 using values of:

$$\lambda = \frac{l}{r_{se}}\sqrt{\frac{K_c}{K_c'}\left(\frac{\sigma_{ye}}{355}\right)}$$

where K_c is as defined in **9.4.2.4**
K'_c is as defined in **9.10.2.2.**

There may be a benefit in allowing for the orthotropic action of a longitudinally stiffened panel and deriving λ for the determination of k_1 or k_s. Such allowance may prove particularly advantageous when a panel contains intermediate transverse stiffeners between cross-beams or diaphragms or when the transverse plate stiffeners are relatively high in comparison with that of the longitudinal stiffeners or when stiffeners have high torsional rigidity. The design rules do not apply to transversely stiffened panels in which the transverse stiffeners are not stiff enough to prevent overall buckling. In such instances recourse may be made to the rules for calculating the critical buckling stresses for orthotropic plates given in **Annex N**. Those rules are derived from classical elastic buckling theory and may be used to calculate stress levels to cause overall buckling of a panel between rigid boundary or buckling between intermediate transverse stiffeners, the lowest of which will govern the appraisal strength.

In the context of these rules the boundaries of the panels are taken as being at webs, plated diaphragms or other transverse members satisfying the requirements of **9.15.3**.

The tolerance on initial bow of stiffeners in BS 5400-6 is l/750 and the rules of this clause allows for 1.2 times that tolerance.

Application of the rules in **Annex J** may be of benefit when the limiting stress is governed by overall buckling of a multi-stiffened panel with diverse values of stiffener imperfections.

9.10.3.3.2 Longitudinal stiffeners

Add at end:

In criterion (c) when modified values of K_c given in **9.10.2.2** are used:

$$\frac{1}{\gamma_m \gamma_{f3}} \text{ must be factored by } \left(\frac{K_c}{K_c'}\right)$$

and λ shall be taken as:

$$\frac{l}{r_{se}}\sqrt{\frac{K_c}{K_c'}}\sqrt{\left(\frac{\sigma_{ye}}{355}\right)}$$

9.10.5 Curtailment of longitudinal flange stiffeners

Add at end:

In assessment, where longitudinal flange stiffeners are curtailed prematurely beyond the theoretical cut off point, due account of this shall be taken in application of the foregoing clauses. The arrangement shall always be checked to ensure the extension beyond any assumed cut off point is sufficient to develop the assessment loads in the stiffener. The assessment procedure shall take due account of the actual end of the stiffener in deriving the capacity of the arrangement, by working back to the point where the stiffener can be assumed to be effective. The resulting extension shall be ignored for calculating stresses and other strength checks.

9.11.1 General

Add at end:

Webs not complying with the requirements of 9.3.3 (with respect to openings) or of 9.11.6 (with respect to partly extended/curtailed stiffeners) shall be assessed for the effects of stress concentrations and detailed local analyses shall be used in all such cases.

9.11.4.3 Buckling Coefficients

9.11.4.3.1 General.
Add at end:

Where the out-of-flatness of the plate panels exceeds the tolerance in BS 5400-6, allowance shall be made for this in deriving the buckling coefficients and their interaction. A method for this is given in **Annex T**.
Where the out-of-flatness of the plate panels is less than the tolerance in BS 5400-6 allowance may be made for this in deriving the buckling coefficients and their interactions.

9.11.5.2 Strength of longitudinal web stiffeners

Add at end:

Where in assessment of the adequacy of a longitudinal web stiffener allowance is to be made for initial departures from straightness, Δsx, measured in accordance with BS 5400-6 over a gauge length taken as a, σ_{ls} and k_s shall be calculated from the equations in **Annex G13** with η taken as:

$$\eta = 0.0083\,(\lambda - 15) + \left(\frac{\lambda - 15}{\lambda}\right)\left[\frac{(1.2\Delta_{sx} - 0.0016a)y}{r^2_{se}}\right]$$

but not less than zero.

in this expression

y is the distance from the neutral axis of the effective stiffener to the extreme fibre under consideration

Δ_{sx} is taken as positive when the bowing is in a direction away from the extreme fibre under consideration.

The benefit of orthotropic action may be utilised by using the expressions given in Annex N and the modification to r_{se} given in **9.10.2.3**. To allow for the destabilising effects of stresses in the plate panels, additional checks shall be made against potential sub-panel buckling modes in accordance with **N.2** of **Annex N**. In the case of web stiffeners, with reasonable levels of shear stress, one of the sub-panel buckling modes will generally govern over the overall mode, the governing case being dependent on the interaction of stabilising and destabilising effect of the plate panels between the longitudinal stiffeners. Each longitudinal web stiffener will generally need to be separately checked to cater for the variation of direct stress and shear stress through the depth of the web. The effect of transverse stresses shall also be taken into account, in both sub-panel buckling cases as well as in the overall mode.

The strengths given in this clause are deemed to allow for initial out-of-straightness equal to 1.2 times the tolerance in BS 5400-6, i.e. a/625, as well as the effects of residual stresses.

The value of η corresponding to an initial departure from straightness equal to 1.2 Δ_{sx} is

$$1.2\,\frac{\Delta_{sx} y}{r^2_{se}}$$

Adjustment of the η value should therefore be made to allow for differences between measured imperfections and the tolerance. The adjustment made allows for the empirical relationship between η and λ used in **Annex G.13** whereby η = 0 for λ ≤15.

9.11.6 Curtailment of longitudinal web stiffeners

Add at end:

In assessment, where longitudinal web stiffeners are curtailed prematurely beyond the theoretical cut off point, due account of this shall be taken in application of the foregoing clauses. The arrangement shall always be checked to ensure the extension beyond any assumed cut off point is sufficient to develop the assessment loads in the stiffener. The assessment procedure shall take due account of the actual end of the stiffener in deriving the capacity of the arrangement, by working back to the point where the stiffener can be assumed to be effective. The resulting extension shall be ignored for calculating stresses and other strength checks, but may be used in assessing stability in accordance with 9.11.7.

Add new clause 9.11.7:

9.11.7 Discontinuous longitudinal stiffeners not connected to transverse stiffeners

Where longitudinal stiffeners are discontinuous, i.e. they are fitted between transverse stiffeners and are not adequately connected to them, their area shall be ignored in calculating the stresses in the cross section. They may, however, be used in assessing the stability of the web under shear and/or compression provided they are terminated not more than four times the web thickness from the transverse stiffeners. In carrying out such stability checks the longitudinal stiffeners shall be assumed to carry a compressive stress equal to that in the web plate calculated in accordance with the above.

9.12.1 General

Delete 1.5 in line 3 and substitute 1.2

9.12.2 Elements providing discrete intermediate restraints

In the definition of σ_{fc} replace “strength” by “stress”.

Add at end

When measured imperfection has been used the forces should be modified as follows:

1) for lateral restraints

$$F_R = \left(\frac{\sigma_{fc}}{\sigma_{ci} - \sigma_{fc}}\right)\frac{1.2\Delta_f}{\delta_R}$$

but not greater than

$$F_R = \left(\frac{\sigma_{fc}}{\sigma_{ci} - \sigma_{fc}}\right)\frac{(n+1)48\Delta_f EI_c}{\mathrm{n}l_R^{\,3}}$$

2) for torsional restraints

$$\left(\frac{\sigma_{fc}}{\sigma_{ci} - \sigma_{fc}}\right)\frac{1.2\Delta_f}{\delta_{R\theta}}$$

or when $l_w > 13.3D$

$$F_R = \left(\frac{\sigma_{fc}}{\sigma_{ci} - \sigma_{fc}} \right) \frac{D}{50\delta_{R\theta}}$$

where Δ_f is the measured imperfection taken over a gauge length normally equal to the beams between points of support in accordance with BS 5400-6.

9.12.3 Discrete intermediate U-frame restraints

9.12.3.2 Strength

When the restraints at supports are not effectively rigid the mode of buckling of the compression flange adjacent to supports will be such that the end supports will deflect in a direction opposite to that of the intermediate U-frames. For a given lateral deflection of an intermediate frame relative to the end support the absolute deflections of the intermediate frame will be reduced. The rule given for factoring F_R has been derived for the case in which there are a number of intermediate frames within the critical buckling half-wave length. It may be conservatively applied when there are only one or two frames within that length.

The influence of end support flexibility on the forces F_R in frames within half-wavelengths remote from the supports (when several half-waves occur in a span) is slight.

9.12.4.2 Deck not at compression flange level

Add at end of (a):

When a bridge with compression flanges restrained by the webs is to be assessed using measured deviations of the flanges from straightness, the horizontal forces, per unit length F_R shall be calculated either by nonlinear elastic analysis with the measured deviations allowed for in the initial geometry or from the above equation with 1.2 Δ_{Fmax} replacing $l_e/667$

where

Δ_{Fmax} is the maximum value of ΔF obtained in accordance with Table 5 in BS 5400-6 with a gauge length G equal to le traversed along the critical parts of the flange.

9.12.5.2.2 Force due to bow of compression flange

Add at end:

When the force is determined using the measured bow of the compression flange the coefficient 0.005 shall be replaced by 3.8 $\Delta F_{max}/L$

Where

ΔF_{max} is the measured value as defined in 9.12.4.2

L is the distance between the supports.

Add new clause 9.12.6:

9.12.6 Restraint to plastic hinges

All structures which are assessed using plastic methods of analysis in accordance with 7.5 shall provide lateral restraint close to all locations of plastic hinges which may occur under the various load cases. Such restraint shall be provided within a distance along the member from the theoretical plastic hinge locations not exceeding half the depth of the member.

Torsional restraint should be present close to plastic hinge positions as required in IS EN 1993: Part 1. The restraint should be adequate to resist, in addition to any other lateral forces, a lateral force which is dependent on the values of the plastic moments at the position of the restraint. IS EN 1993: Part 1 does not offer guidance in determining this force but a reasonable value, consistent with other treatment in IS EN 1993: Part 1, would be that obtained as follows:

(i) for each beam in which a plastic hinge is taken to be developed as a result of the applied loading, calculate a lateral force which is 1% of the value of the plastic moment capacity divided by the depth of the beam;

(ii) apply each (and all) of these lateral forces to the restraint system at the level of the compression flange at the appropriate beam, together with any other applied lateral forces. The direction of the lateral forces must be such as to induce the greatest effects in the bracing system.

9.13 Transverse web stiffeners other than at supports

9.13.1 General

Add at end:

In the assessment of existing arrangements where transverse stiffeners are not provided in accordance with the above, local effects shall be considered. Detailed analyses shall be carried out to cater for local effects resulting from the following:

a) absence of web stiffeners where cross beams connect to the web;

b) absence of web stiffeners where a sloping flange changes direction;

c) where the stiffener does not extend over the whole depth of the web or is not fitted closely to the flange at a point of application of a concentrated load to the flange;

d) where cut outs are not properly connected to the longitudinal stiffener

The assessment may utilise the relevant aspects of **9.14.6** and **9.15.6**.

As an alternative to the provisions of **9.13.3** to **9.13.6**, the adequacy of the transverse stiffeners or deep webs with longitudinal stiffeners may be assessed using the methods of **9.15.6.** In this case the longitudinal stiffeners shall also be checked at the serviceability limit state as for the flanges in accordance with **9.10.3.3**.

Where a transverse web stiffener does not extend the full depth of the web, or where a stiffener is not provide at the connection of a cross beam, a conservative check may be made by assuming that the load in the stiffener (arising from, for example, a change of direction of the flange) or in the cross beam is applied as a transverse stress, σ_2, to a web panel which is then assessed in accordance with **9.11**. The transverse stress σ_2 may be determined by applying the load over a length of web equal to twice the connected length of the stiffener or cross beam.

Alternatively, and particularly for the case of a cross beam of a box girder connected to a deep web other than at the position of a web transverse stiffener, a finite element analysis of the web may be undertaken. To carry out an adequate analysis the program should be able to model the non-linear effects associated with web buckling and the development of tension field action between the cross beam and the nearest transverse web stiffeners. The comments given in **9.15.6** on structural modelling for compression flanges may be of assistance.

Where a transverse web stiffener is stopped short of a flange by more than five times the web thickness, there is a greater risk of fatigue cracking; inspection should pay particular attention to such areas. Assessment of the effects of load applied to the flange should treat the web as unstiffened in this area.

9.13.3.3 Axial force representing the destabilizing influence of the web

Add at end:

In the assessment of the adequacy of a transverse web stiffener, where allowance is to be made for initial departures from straightness, Δsx, measured in accordance with BS5400-6, ks shall be calculated as described in 9.11.5.2.

9.13.5.3 Buckling of effective stiffener section.

Add at end:

Where in assessment of the adequacy of a transverse web stiffener allowance is to be made for initial departures from straightness, Δsx, measured in accordance with BS 5400-6, σls shall be calculated as described in 9.11.5.2.

9.14.1 General

Add at end:

In the assessment of existing arrangements where bearing stiffeners are not provided in accordance with the above, local effects shall be considered. Detailed analyses shall be carried out to cater for local effects resulting from the following as appropriate:

a) where the stiffener does not extend over the whole depth of the web or is not fitted closely to the flange;

b) where cut outs are not properly connected to the longitudinal stiffener.

Where bearing stiffeners are not provided, in accordance with the above, the adequacy of the web under transverse loading shall be checked in accordance with 9.14.6.

9.14 Load bearing support stiffeners

9.14.1 General

In welded construction, it can generally be presumed that bearing stiffeners have been fitted as a matter of formal fabrication practice. Such fitting will either have achieved good contact over the end of the stiffener or at worst only a small gap. For ULS considerations it can be taken that local deformation would occur if there is a gap and that the bearing stress check of **9.14.4.2** would apply.

However, if there is evidence that there is more than a small gap, this check would not be appropriate. The welds would need to be checked instead. If there is a gap and no weld, or inadequate weld, a check should be made in accordance with **9.14.6**. The bearing area should include areas within the dispersal lines of the flange angles and stiffener cleat angles which are riveted to the flange.

Riveted construction will normally not have fitted stiffeners. Either the cleated connection should be checked for adequacy or the web should be checked in accordance with **9.14.6**.

9.14.3.3 Eccentricity.

Add at end:

In assessing the adequacy of an existing stiffener, where any error in positioning and any unevenness of seating on a flat bearing is measured, the following values of eccentricity shall be taken into account in respect of (c) and (d) above.

(1) half the width of the flat bearing surface plus the measured error in positioning for flat topped rocker bearing in contact with flat bearing surface; or

(2) the measured error in positioning for radiused upper bearing resting on flat or radiused lower part or for flat upper bearing resting on radiused lower part.

9.14.4.3 Buckling of effective stiffener section

In the definition for P, delete 'within the middle third of its length'.

Add new clause 9.14.6:

9.14.6 Unstiffened web at supports

9.14.6.1 Strength of web

The strength of an unstiffened web shall be taken as the limiting value of patch load P, as determined in accordance with **Annex D**.

9.14.6.2 Buckling resistance of web

The buckling resistance P_D of an unstiffened web over a bearing shall be taken as:

$$P_D = \frac{\sigma_c b_{eff} t_w}{\gamma_m \gamma_{f3}}$$

Where

σ_c is the ultimate compressive stress about an axis along the centre line of the web obtained from σ_c/σ_y in accordance with Curve C of Figure 37;

NOTE: In using Figure 37, le shall be determined taking account of the lateral and rotational restraint of the flange.

b_{eff} is the effective breadth of web obtained from.

$b_{eff} = \sqrt{(d^2 + s^2)}$

but not greater than the width available (see Figure 28).

d is the overall depth of the beam.

s is the bearing length.

γ_m is taken as 1.05 for ultimate limit state.

9.14.6 Unstiffened web at supports

This may also be needed for checking stiffened cases with badly fitting stiffeners or riveted construction, see **9.14.1**. Where cross beams are present load effects due to cross beams should be taken into account.

9.15.1.2 Compression flanges

Add at end:

Compression flange transverse members which do not comply with the requirements of **9.15.3** and **9.15.5** shall be assessed in accordance with **9.15.6**.

9.15.4.4 Profile deviation in compression flanges

Add at end:

When a survey of the deflections of the transverse members has been carried out, the factors of 200 and 160 in the denominator of (a), (b) and (c) above shall be replaced by

$$\frac{G}{3\Delta_c} \text{ and } \frac{G}{3.75\Delta_c}$$

respectively where G and Δ_c are defined in Table 5 of BS 5400-6. The actual value of Δ_c to be used shall be the largest measured value at any point of the span of the transverse member being considered and shall not be taken as less than 3mm in any circumstances.

Add new clause 9.15.6:

9.15.6 Compression flange transverse members with insufficient stiffness to prevent overall buckling of the flange, or with insufficient strength

9.15.6.1 General

When the stiffness of the effective transverse member (when assessed in accordance with **9.15.3**) is not capable of restricting the buckling wavelength of the flange to the spacing between cross frames, assessment may be made by an appropriate method that caters for overall buckling of flanges. Appropriate methods are by means of a full analysis in accordance with **9.15.6.2** or by utilising the critical stress of the flange in accordance with the guidance in **9.15.6.3**.

For both approaches the effective sections to be used shall be as set down in **9.15.2**, and the effects to be considered shall be as set down in **9.15.4.**

Further to the above, advantage may be taken of the reduced destabilising effects that can be obtained by utilising more exact stress proportions and distributions in the flange. Also allowance may be made for measured imperfections and the effect of the mode of buckling on imperfections assumed. These procedures may also be applied in cases where strength is initially assessed as insufficient.

The criterion for stiffness of a transverse member on a compression flange specified in **9.15.3** is based on ensuring that the overall buckling mode for the flange is one in which the transverse members alternate up and down. Under certain circumstances (and particularly when the span of the transverse members is large compared with their spacing) this can be a very onerous and, indeed, unnecessary requirement.

It is known that some compression flanges perform perfectly adequately without meeting the criterion of **9.15.3** and this can be shown by a detailed non-linear three-dimensional analysis. Hence the option for such an analysis must be allowed by the Standard, since such flanges may otherwise fail assessment. It is necessary, however, to lay down some basic rules for the analysis, and these are included below.

The alternative method given in Annex K caters for the above and avoids the need for the detailed modelling required to tackle the analysis of transverse members and associated flanges. Some further guidance is given in references **9.15.1** to **9.15.4**.

The basic notes on the structural model below should not be considered as all encompassing, and each specific case will need individual attention if the option of a full analysis is used.

Add new clause 9.15.6.2:

9.15.6.2 Structural model when a full analysis is utilised

The model shall be in the form of a non-linear analysis that fully takes into account the stiffness of the orthotropic deck systems and the magnified stresses resulting from deformation of the cross girders due to combined actions of longitudinal deck stresses and imperfections of the cross girders. The structural model to be analysed shall include an initially deformed shape of the flange. In the absence of a survey of the actual flange, the relevant deformations specified in Item 5 of Table 5 of BS 5400-6 shall be used with the peak values occurring at the mid points of each span of the transverse member or at the cantilever tips, and with a smooth curve between. Alternate spans of a particular transverse member shall be deformed up and down.

Adjacent transverse members along the bridge shall be deformed up and down either alternately, or alternately in groups of two, three ... etc., whichever eventually gives the highest forces and moments. Consideration shall also be given to having an undeformed transverse member between the up and down groups.

The Computer program shall be capable of analyzing displacement in all six primary degrees of freedom (three linear, three rotational) and shall take into account the change of geometry under load. Member material behaviour may be linear elastic. No allowance for plasticity shall be made in the analysis.

The compressive load in the flange shall be applied at the end and side boundaries of the model, as appropriate. The transverse loads on the flange and transverse members shall be those specified in **9.15.4.1(a) to (f)** insofar as they are not otherwise taken into account in the model. Loading between transverse members shall be applied directly at the appropriate position and not distributed as described in 9.15.4.5. The loads shall not be magnified by a destabilising factor as this will be taken account of in the non-linear analysis.

If a survey is made of the actual deformations, these may be used directly subjected to a minimum of 3mm but increased in the model by a factor of 1.2. If the result of the analysis shows a deflected form radically different from the measured form, further analyses shall be made with the initial deformation conforming more closely to the final pattern.

(a) **extent.** It will normally be conservative to analyse a width of one segment as defined in 9.15.3.1. As, however, it is only likely that this method will be used for transverse members where β is very large (see **9.15.3.2**) advantage could normally be obtained if adjacent segments are of smaller span and are included in the analysis to give a degree of end fixity to the long segment.

The number of transverse members to be included longitudinally will depend on the overall buckled shape of the flange. Sufficient members should be included to cover a minimum of two half waves of buckling. The wavelength for overall buckling may be obtained either theoretically or by progressively lengthening the model to be used for analysis until the critical length is found.

(b) **idealisation**. It will generally be sufficiently accurate to represent all elements of the flange by beams with their neutral axes in a common plane. Where appropriate these should coincide with actual physical members (eg the transverse member or longitudinal stiffeners). In some cases (eg a flange with no longitudinal stiffeners) it may be necessary to insert 'equivalent' beams. In evaluating beam properties, an appropriate effective width of plating may be included in the effective stiffener section.

The beams should be subdivided into sufficiently short lengths to reproduce their buckling behaviour. This will to some extent be dependent on the program used – for example, if it is a simple iterative extension to a linear stiffness analysis, a much finer subdivision will be needed than if it includes stability functions.

More sophisticated models, for example, using thin shell elements, may of course be used if facilities are available.

(c) **Boundary conditions**. These should be simple pinned supports with no moment continuity; such continuity, if necessary, should be provided by analysing a larger proportion of the flange.

(d) **measured deformations**. The specified multiplier of 1.2 when using actual deformations allows for minor departures of the deflected batten from the mode of buckling and small variations which may cause overestimates of strength. This is consistent with various clauses in the design Code where the design imperfections is 1.2 times the specified maximum value.

9.15.6.3 Alternative method of assessment utilising critical stress

All guidance is given within **Annex K**.

9.16.1 General

Add at end:

Assessment of plated intermediate diaphragms shall be assessed in accordance with **9.18**.

9.16.2.1 Girder layout

Add at end:

Cross frames in girders not complying with the above shall be assessed in accordance with **9.16.6**.

9.16.2.2 Cross frames

Add at end:

Cross frames not complying with these limitations shall be assessed in accordance with this Standard with the exception of **Annex B**, provided that the analytical models used fully account for the plane direction of the frames and interconnection between the frames and longitudinal members.

9.16.3 Load effects to be considered

Add at end:

The forces and stresses due to torsion to be carried by a frame shall be determined from elastic analysis (see **9.16.4.2**) or, for boxes with any web inclination and provided that the cross frames comply with **9.16.2.2**, shall be derived in accordance with annex B.3.4.

Where the webs of the box girder are inclined to the vertical, horizontal components of load induced in top and bottom transverse members shall also be considered.

*Add new clause **9.16.4.4**:*

9.16.4.4 Ring frame corners

The strength of the connection between web transverse members and flange transverse members shall be adequate to transfer the forces and moments from one member to the other. In determining the strength of the connection, the web and flange shall only be considered to act with the transverse member if the corner is stiffened, see **9.16.2.3**.

9.16.4 Corner stiffening and ring cross frames (9.16.2.3 and 9.16.4.4)

At the corner of a box the junction of web and flange members is required to transfer moment, shear and axial forces. The magnitude of each of these components depends very much on the configuration of the cross section. For example, the moments at the bottom corner of a small rectangular box will be quite small whilst those at the top corner of a large trapezoidal box will be quite large. For the former a simple lapped connection may be adequate whilst for the latter a stiffened portal knee may be required. The assessment should consider how both shear and the forces in the flanges of the transverse member are transferred.

The web and flange of the box generally act as flanges to the transverse members. At the corners of the box they can only be considered to do so if there is stiffening along the junction line. This is covered by the limitation in **9.16.2.3**.

*Add new clauses **9.16.6** and **9.16.7**:*

9.16.6 Cross frames not complying with limitations

Where the adequacy of cross frames to girders not complying with the limitations defined in 9.16.2 is to be assessed, the strengths of the components of the frames shall be determined from this Standard subject to the following requirements: Global analysis shall be undertaken in accordance with 7.1 and 7.2. The structure shall be analysed either by a finite element method with all its primary components modelled or an equivalent grillage provided that the elastic properties of the equivalent members are derived from finite element analysis of the box girders.

Analysis to determine load effects from local loads and reactions including distortional effects shall be undertaken using a finite element method on a model of sufficient extent to ensure that the effects calculated are insensitive to assumed end conditions.

9.16.7 Cross girder stiffness

Where distortional and warping stresses in the box girders are calculated in accordance with annex B the stiffness of a cross girder shall comply with the requirements of **B.3.4**. Where the stiffness requirements are not complied with, the stresses shall be derived in accordance with **8.3**.

9.17 Diaphragms in box girders at supports

9.17.1 General

Add at end:

Where the adequacy of a stiffened diaphragm not complying with the limitations given in **9.17.2** is to be assessed, the assessment shall be undertaken in accordance with **Annex L**.

9.17 Diaphragms in box girders at supports

The rules enable stiffened support diaphragms which do not comply with the simplifying limitations in **9.17.2** to be assessed by reference to other clauses and sub-clauses as set down in **Annex L**.

The principal departures from **9.17** relate to the need for more refined analysis of load effects and stresses entailing finite element analysis with plate elements to model box walls, any internal webs and diaphragms. For analysis of boundary forces on diaphragms the meshes used other than close to a diaphragm may be larger than for analysis of diaphragm stresses. The models used should reproduce the actual geometry including any skew or out of verticality in diaphragm alignment. Supports to diaphragms should be modelled to represent their degrees of freedom and stiffnesses.

Since stress fields derived from the analysis will be complex reference will need to be made to l.9 in deriving effective stresses for buckling checks.

It has not been possible to codify the treatment of buckling of panels with large openings. Either such panels will need to be framed and ignored in stress analysis and strength checks or reference be made to relevant research papers.

The methods given in **9.18.5** and **9.18.6** use strength provisions that are compatible only with the assumed methods of stress derivation given therein. Stresses derived by finite element analysis should not be substituted directly for these derived stresses.

9.17.6.7: Buckling of diaphragm stiffeners

Add at end:

"The benefit of orthotropic action may be utilised by using the expressions given in **Annex N** and the modification to use given in **9.10.2.3**.To allow for the effects of destabilising stresses in the diaphragm plates, additional checks must be made against sub-panel buckling modes in accordance with **N.2** of **Annex N**. Due to the general presence of stresses in the direction of the diaphragm stiffener, transverse to the stiffener and the likely presence of significant shear stresses, all possible modes must be checked."

9.18 Intermediate diaphragms in box girders

The rules apply to both unstiffened and stiffened intermediate plated diaphragms, and are applicable only with the limitations given in **9.17.2** for support diaphragms. The rules given do not necessitate the use of finite element methods.

For stiffened intermediate diaphragms not complying with these limitations, reference is made to **Annex L** which can be used in conjunction with **9.18**. For unstiffened intermediate diaphragms not complying with these limitations, recourse has to be made to finite element methods (for which some of the guidance in **Annex L** may still be applicable) or by reference to relevant research papers.

The methods given in **9.18.5** and **9.18.6** use strength provisions that are compatible only with the assumed methods of stress derivation given therein. Stresses derived by finite element analysis should not be substituted directly for these derived stresses.

*Add new clause **9.18**:*

9.1.8.1 General

This section shall apply to intermediate plated diaphragms provided in box girders to transfer deck loads to the webs, to resist forces due to local changes in slope of the flanges and to restrict distortion of the cross-section.

9.18.2 Limitations

The limitations given in **9.17.2** other than those related to bearings shall be applicable to intermediate diaphragms. Assessment of unstiffened and stiffened intermediate diaphragms shall be carried out in accordance with **9.18.5** and **9.18.6** respectively.

9.18.3 Loading on diaphragms

9.18.3.1 Derivation

The load effects in intermediate diaphragms and associated parts of box girders shall be derived from global and local analysis in accordance with **7.1**, **7.2** and **9.4.1**.

9.18.3.2 Effects to be considered

Intermediate diaphragms shall be assessed with due account taken of the application of the load effects given in **9.13.3** and **9.15.4**.

In this context the diaphragm/web junction shall be considered to be equivalent to a web stiffener.

9.18.4 Effective sections

The effective sections of intermediate diaphragms to be used in deriving stresses shall be in accordance with

9.17.4.

9.18.5 Unstiffened intermediate diaphragms

9.18.5.1General

Unstiffened diaphragms complying with the limitations of **9.18.2** shall be assessed to the yield criterion of 9.18.5.4 and the buckling criterion of **9.18.5.3** using reference stress values of **9.18.5.2** and buckling coefficients of **9.18.5.3**. Web/diaphragm junctions shall be assessed in accordance with **9.18.7**. Diaphragm stiffness shall be assessed in accordance with **9.18.8**, to ascertain the relevant distribution of warping and distortional stresses in the box girder or diaphragm.

9.18.5.2 Reference values of in-plane stresses

9.18.5.2.1 General

The stresses in an unstiffened diaphragm resulting from the load effects given in 9.18.3 shall be determined in accordance with **9.18.5.2.2** to **9.18.5.2.4**.

9.18.5.2.2 Vertical stresses

The reference value of the in-plane vertical stress σ_{R1} shall be taken as the greater of σ_{R1T} and σ_{R1B}

where

σ_{R1T} is the maximum value of compressive vertical stress on the effective horizontal section of the diaphragm plating beneath the top flange due to deck loading

σ_{R1B} is the maximum value of compressive vertical stress on the effective horizontal section of the diaphragm plating above the bottom flange due to change in slope of the flange or other applied vertical loading.

9.18.5.2.3 Horizontal stresses

By reference to Figure 9.18.5A the reference value of the in-plane horizontal stress at a section distance S from the centre of the web, σR2, shall be taken as the greater of:

$[\sigma_{R2T} + (\sigma_2)]$

or

$[\sigma_{R2B} + (\sigma_2)]$

where

$$\sigma_{R2T} = \frac{M}{Z_T}$$

$$\sigma_{R2B} = \frac{M}{Z_B}$$

$$M = M_e + F_1 Y_T + F_2 Y_B + \frac{Q}{2D}(B_T - B_B)\left(Y_B - \frac{D}{2}\right) - Q_T S$$

$$F_1 = \frac{Q_v}{D}\left[S + \frac{(B_T - B_B)}{4}\right]\left\{1 - \frac{1}{B_T}\left[S + \frac{(B_T - B_B)}{4}\right]\right\} + \frac{Q_T}{D}\left[S + \frac{(B_T - B_B)}{4}\right]$$

$$F_2 = \frac{Q_v}{D}\left[S + \frac{(B_T - B_B)}{4}\right]\left\{1 - \frac{1}{B_B}\left[S + \frac{(B_T - B_B)}{4}\right]\right\} + \frac{Q_T}{D}\left[S + \frac{(B_T - B_B)}{4}\right]$$

M_e is the bending moment at the section under consideration due to externally applied loads transmitted to the diaphragm (see 9.15.4) and changes in slope of the bottom flange calculated treating the diaphragm as a simply-supported beam spanning between the mid points of the webs.

Y_T and Y_B are the distances to the top and bottom diaphragm/flange junctions from the centroid of the effective diaphragm section.

Q = $Q_V + Q_T$.

Qv is one half the total resultant load transmitted to the diaphragm (see **9.15.4**).

QT = $\left(\frac{T}{B_B+B_T}\right)$

T is the torque about the centreline of the diaphragm due to any eccentricity of externally applied loads transmitted to the diaphragm (see **9.15.4**).

$$[\sigma_2] = (V_T - V_B)\frac{Tan\beta}{2A_e}$$

V_T is the total factored vertical load applied to the top of the diaphragm.

V_B is the total factored vertical load applied upwards to the bottom of the diaphragm (in either case the coincident values of V_T and V_B shall be taken as those causing the maximum combined stress in strength assessment).

Z_B Z_T are the effective section moduli of the diaphragm and flanges on the diaphragm enter line with respect to the bottom flange and the top flange respectively.

t_D, σ_{yd} are as defined in **9.17.5.4**.

A_e is the effective area of the diaphragm and flanges at the vertical section under consideration.

β is the greater angle of inclination to the vertical of either web.

B, B_T, B_B are as defined in Figure 9.18.5A.

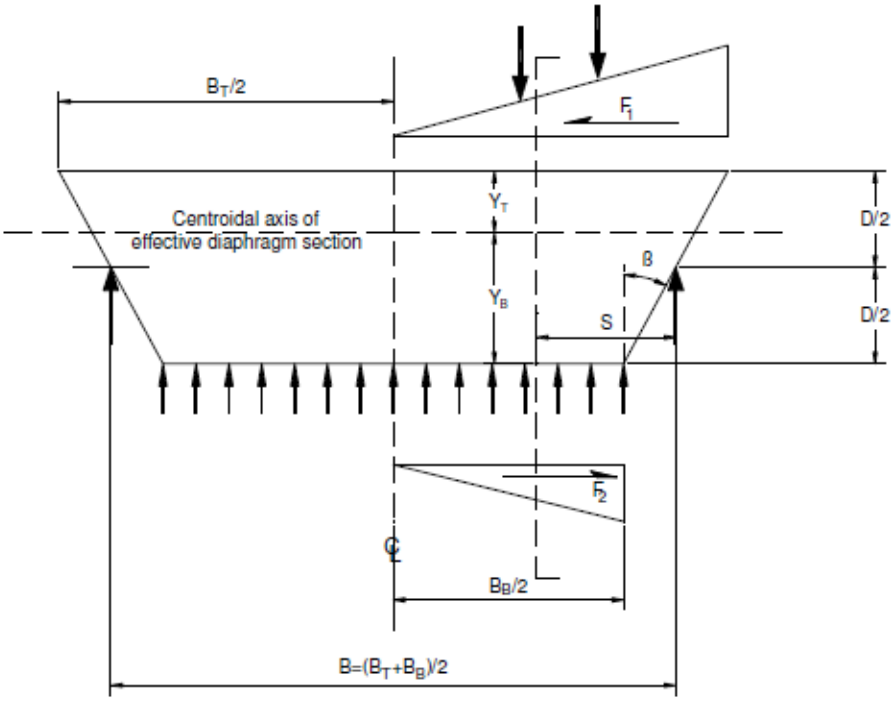

Figure 9.18.5A

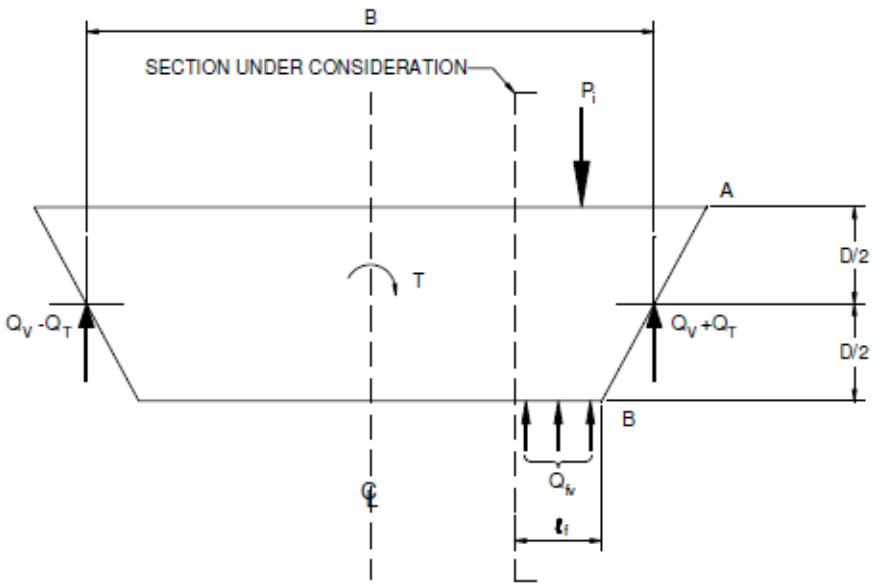

Figure 9.18.5B

9.18.5.2.4 Shear stresses

The reference value of the in-plane shear stress τ_R shall be taken as follows:

$$\tau_R = \left(Q_v + Q_T - \Sigma P_i + Q_{fv}\right)\frac{1}{A_{ve}}$$

where, as shown in Figure 9.15.5B

Q_v and Q_T are as defined in **9.18.5.2.3**.

A_{ve} is the minimum effective vertical shear area, as given in **9.17.4.3**.

ΣP_i is the sum of the vertical applied loads transmitted to the diaphragm between the section considered and the edge of the top flange at point A.

Q_{fV} is the vertical force transmitted to the diaphragm by the portion of the bottom flange over a width l_f when there is a change of flange slope.

l_f is the horizontal distance from the section considered to the edge of the bottom flange at point B.

The value of τ_R to be used in yield checks in accordance with **9.18.5.4** is the maximum value within the middle third of the median width, B, of the diaphragm. Additionally, the value on the sections adjacent to the webs shall be applied in yield checks with $\sigma_2 = 0$. For buckling checks τ_R shall be taken as the average shear stress in the diaphragms.

9.18.5.3 Buckling of diaphragm plate

The diaphragm plate shall be assessed in accordance with the criterion given in 9.11.4.4 using the buckling coefficients for an unrestrained panel given in clause 9.11.4.3 in which the stresses defined in 9.11.3 shall be taken as the following:

σ_1 $= [\sigma_2]$

σ_b $= \sigma_{R2T}$ or σ_{R2B}, whichever is compressive

t $= \tau_R$

σ_2 $= \sigma_{R1}$

The panel dimension ‘b’ in Figure 19 shall be taken as the depth of the diaphragm (D in Figure 34) and the dimension ‘a’ shall be taken as the maximum width between box webs.

9.18.5.4 Yielding of diaphragm plate

The values of σR1, $\sqrt{3\tau_R}$ and $\sqrt{\sigma_{R2}{}^2 + 3\tau_R{}^2}$

shall not exceed $\frac{\sigma_{yd}}{\gamma_m + \gamma_{f3}}$

9.18.6 Stiffened intermediate diaphragms

9.18.6.1 General

Intermediate diaphragms stiffened by an orthogonal system of stiffeners shall be assessed in accordance with the yield and buckling criteria for the plating given in **9.18.6.3.1**. Stiffeners shall be assessed in accordance with the yield and buckling criteria given in **9.18.6.3.2**. Stiffeners which span between box walls shall be treated as primary. All other stiffeners shall be treated as secondary. Web/diaphragm junctions shall be assessed in accordance with **9.18.7**. Diaphragm stiffnesses shall be assessed in accordance with **9.18.8**, to ascertain the treatment of warping and distortional stresses in the box girder or diaphragm.

9.18.6.2 Values of in-plane stresses

9.18.6.2.1 General

The stresses in a stiffened diaphragm resulting from the load effects given in **9.18.3** shall be determined in accordance with **9.18.6.2.2** to **9.18.6.2.4**.

9.18.6.2.2 Vertical stresses

Vertical stresses, σ_d, due to concentrated loads applied to the deck shall be calculated assuming dispersion of load at 45° from the width of contact and diminishing linearly to zero from the level of intersection of the lines of dispersion with the web to the bottom of the diaphragm. Stresses due to changes in slope of the bottom flange shall be calculated from the vertical components of flange force and be assumed to diminish linearly up the height of the diaphragm. The vertical stresses due to top and bottom loads are to be added.

9.18.6.2.3 Horizontal stresses

The horizontal stresses shall be derived in accordance with **9.17.6.2.3**. In-plane bending, σ_{2b}' shall be calculated by treating the diaphragm with the associated effective widths of flanges as a simply supported beam spanning between the box webs (span B) and horizontal stresses, σ_{2q}, due to inclination of webs to the vertical shall be calculated in accordance with **9.18.5.2.3**.

9.18.6.2.4 Shear stresses

The values of the in-plane shear stresses, τ, on any section shall be taken as the reference value τ_R as defined in **9.18.5.2.4.**

9.18.6.2.5 Stresses in diaphragm stiffeners

The equivalent stress in a stiffener for buckling check shall be determined from **9.17.6.3.4** as appropriate for intermediate stiffeners with σ_{2b}, σ_{2q} and τ calculated in accordance with **9.18.6.2.3** and **9.18.6.2.4**. Except that σ_a for vertical intermediate stiffeners is not necessarily zero but shall include loading effects due to tension field in accordance with **9.13.3.2** and **9.13.4.**

Loading from clause **9.13.3.3** shall be excluded. All additional load effects as defined in **9.18.3.2** shall be considered.

9.18.6.3 Strength criteria

9.18.6.3.1 Diaphragm plating

Plate panels between stiffeners or between stiffeners and box walls shall be assessed in accordance with the criteria in **9.17.6.4** and **9.17.6.5**.

9.18.6.3.2 Stiffeners

Diaphragm stiffeners shall be assessed in accordance with the criterion given in **9.17.6.7**.

9.18.7 Intermediate diaphragm web junctions

The intermediate diaphragm web junction shall be assessed as a stiffener to the box web spanning between box flanges, unsupported in the plane of the diaphragm, in accordance with **9.17.7.2** to **9.17.7.4** using effective sections derived in accordance with **9.17.4.5**.

9.18.8 Intermediate diaphragm stiffness

Where distortional and warping stresses in the box girders are calculated in accordance with **Annex B** the stiffness of an intermediate diaphragm shall comply with the requirements of **B.3.4**. Where the stiffness requirements are not complied with, the stress shall be derived in accordance with **8.3.**

10. Design of compression members

*Add new **clause 10.3.5**:*

10.3.5 Assessment of sections not complying with shape limitations

Outstands not complying with **10.3.2** or **10.3.3** shall be assessed in accordance with **9.3.2**. Circular hollow sections not complying with **10.3.4** shall be assessed in accordance with **9.3.6**. This means that a lower value of yield stress shall be determined such that compliance with the strength criteria of **10.6** and **10.3.2**, **10.3.3** or **10.3.4** as appropriate is achieved. This lower value of yield stress shall be used in all subsequent assessments of strength, in accordance with **9.3.1**.

10.6.1.1 Strength

Add at end:

Where in assessment of the adequacy of a compression member allowance is made for initial departures from straightness, Δ_s, measured in accordance with BS 5400-6, over a gauge length G equal to the clear length of the compression member, σ_c shall be calculated from the equation in **Annex G16** with η taken as:

$$\eta = \alpha(\lambda - 15) + \left(\frac{\lambda - 15}{\lambda}\right)\left[\frac{(1.2\Delta_s - 0.0012G)y}{r^2}\right]$$

But not less than zero.

The curves given in Figure 37 were derived empirically by reference to test data and include allowances for the effects of residual welding and rolling stresses as well as accidental eccentricities and initial bows. Since they are applicable to members within the tolerances in straightness given in BS 5400-6, it is justifiable to adjust the limiting compressive stresses when departures for straightness differ from the tolerances.

The term β in the Perry formula is given by $\Delta y/r^2$

The tolerance in BS 5400-6 is $\Delta_s = G/1000$ and throughout the design rules allowance has been made for 1.2 times the tolerance.

The modified η equation consequently provides allowance for 1.2 times the difference between measured imperfections and tolerances with the same empirical reduction factor to allow for the plastic capacity of stocky members.

10.6.2.1 Strength

Add at end:

For assessment of the adequacy of a uniform member of I-section subject to combined bending and axial compression, the buckling criterion above shall be replaced by the alternative criterion given in 9.9.4.2.

10.7.2 Evaluation of stresses

Add at end of (c):

Where in assessment of the adequacy of a compression member with longitudinal stiffeners allowance is to be made for measured initial departures from straightness, Δi shall be taken as:

Δ_I = 1.2 Δ_s determined separately for the X-X and Y-Y axes where Δ_s is the departure from straightness measured in accordance with BS 5400-6 over a gauge length G equal to the distance between appropriate points of restraint.

10.7.3 Shape of longitudinal stiffeners

Add at end:

Stiffener shapes not complying with **9.3.4** shall be assessed in accordance with **9.3.1** and **Annex S**. Stiffeners of shapes other than those specified shall be assessed on the basis of the nearest standard shape.

10.8A Battened compression members

The rules for battened strut design stem from those in BS 153 which were based on the work of Koenigsberger (ref 10.8.1). The arrangements and proportions of the members defined are intended to be such that the member as a whole will have a compressive strength of at least 80% of that of a corresponding member free from shear distortion of battens and of the individual components. Members having more flexible and widely spaced battens may be structurally adequate but allowance needs to be made in their strength assessment for shear flexibility and buckling of battens and of individual components between them. The rules for assessment are based on the theory and experimental evidence forming the basis for the rules for design.

The reduction factor of 0.9 on radius of gyration given in **10.8.2** for design allows only for the loss of full effectiveness due to battening of a member complying with design requirements. Provision is made for reduction factors in assessment for less effective arrangements.

The batten thicknesses defined in **10.8.4.2** for design are such that the battens so sized may be accepted without consideration of their buckling. Smaller thicknesses can be accepted in assessment provided that they are checked against buckling.

The shearing forces and moments defined in **10.8.5.2** for design are those due to the effects of axial load on a deformed member, and are treated as constant irrespective of the location of the batten. The assessment values take account of the variation in slope from the nominal axis of a bowed member in relation to the initial imperfection implicit in the Code.

The values of critical load for members not complying with the requirements of the Code may be derived by non- linear buckling analysis or from the theoretical equation derived by Timoshenko (ref 10.8.2) given in **Annex M**.

The limiting shear stresses in battens given in **10.8.5.3** for assessment are taken as two thirds of the elastic critical buckling stresses derived by Girkmann (ref 10.8.3).

10.8.1 general

Add at end:

For assessment, where the arrangements of the member do not comply with any of the above requirements, the strengths of the battens and of the battened member shall be assessed in accordance with Clauses **10.8.5.3** and **10.8.5.4** respectively.

10.8.2 Radius of gyration of the member

Add at end:

For assessment, where the battened member does not comply with the requirements of 10.8.1, the radius of gyration of the member shall be taken as $\sqrt{\phi}$ times the actual radius of gyration where ϕ is as defined in **10.8.5.4.**

10.8.3 Spacing of battens

Add at end:

When the spacings of the battens exceed the limits derived from the above requirements, the strengths of the battened member shall be assessed as described in **10.8.5.4**.

10.8.4.1 Length

Add at end:

Where the length of each batten is less than specified above, the strength of the battened member shall be assessed in accordance with **10.8.5.4**.

10.8.4.2 Thickness

Add at end:

Where the thickness of any batten is less than that specified above the adequacy of such batten shall be assessed in accordance with **10.8.5.3**.

10.8.5.1 Arrangement of battens

Add at end:

Where the arrangement of battens does not comply with the recommendations above the battened compression member shall be assessed in accordance with **10.8.5.4**.

10.8.5.2 Loads and moments on battens

Add at end:

For assessment, (a) and (b) shall be modified to read:

(a) a longitudinal shear force equal to K_bQ_s/nb

(b) a bending moment, acting in the plane of the batten, equal to $K_bQ_s/2n$

where

K_b = l/2 for end battens, for intermediate battens

$$= \tfrac{1}{2}\left(\cos\frac{\pi}{l}x_1 + \cos\frac{\pi}{l}x_2\right)$$

l is the overall length of the battened member;

x_1,x_2 are the respective distances from one end of the member to points a distance s/2 either side of the centre line of the batten under consideration.

For members with battens and their arrangements not complying with the limits given **10.8.1**, **10.8.4** or **10.8.5.1**, the lowest values of the elastic critical buckling loads P^I_{EY} and P^1_{EX} shall be determined as described in **10.8.5.4** and shall be used instead of P_{EY} and P_{EX}.

Where in assessment of the adequacy of a battened member, account is to be taken of measured departure from straightness exceeding that permitted by BS 5400-6, the number 200 in the denominator of equations (1) and (2) above shall be reduced to

$$1/\left(3.8\frac{\Delta_s}{l_e} + \frac{1}{815}\right)$$

where

Δ_s is the departure from straightness measured over a gauge length equal to le.

Add new clause 10.8.5.3:

10.8.5.3 Strength assessment of non-complying battens

Where the arrangements and sizes of the battened member do not comply with the requirements **10.8.1**, **10.8.4** or **10.8.5.1**, the battens shall be of such sizes that:

(a) the maximum bending stress does not exceed

$$\frac{\sigma_y}{\gamma_m\,\gamma_{f3}}$$

(b) the maximum average shear stress =

$$\frac{longitudinal\ shear\ force}{A_{bnet}}$$

does not exceed

$$\frac{\sigma_y}{1.5\sqrt{3}\,\gamma_m\,\gamma_{f3}}$$

where A_{bnet} = Net cross sectional area of the batten;

or the average maximum shear stress does not exceed

$$\frac{K}{\gamma_m \gamma_{f3}} \left(\frac{t_b}{d_b} \right)^2 N / mm^2$$

whichever is the lesser

where

K is obtained from Table 10.8A

t_b is the thickness of the batten

d_b is the depth of the batten in the direction parallel to the axis of the member

b is as defined in 10.8.5.2.

d_b/b	1.5	1.1	1.0	0.9	0.8	0.7	0.6	0.5	0.4	0.3	0.2
K ($x10^4$)	87.3	36.8	32.2	25.1	19.1	14.1	9.9	6.7	4.2	2.3	1.0

Table 10.8A

10.8.5.4 Strength assessment of non-complying battened members

Where the arrangements of the battened member do not comply with the requirements of **10.8.1**, **10.8.4** or **10.8.5.1** the compressive strength of the battened member shall be calculated in accordance with Clauses **9.1** to **9.9**, **10.1** to **10.7** using effective radii of gyration defined in **10.8.2**.

The lowest values of the elastic critical buckling loads P^1_{EY} and P^I_{EX} shall be taken as K times the critical loads determined by non-linear buckling analysis of the battened member.

where

K = 1 for welded or friction grip bolted battens;

= 0.7 for riveted or black bolted connections

Alternatively, where the arrangement of battens complies with the requirements of **10.8.5.1** and battens are equally spaced, P^1_{EY} and P^I_{EX} may be determined from **Annex M**.

The factor $\varphi^{0.5}$ should be taken as

$$\sqrt{\frac{P^1_{EY}}{P_{EY}}} \text{ or } \sqrt{\frac{P^1_{EX}}{P_{EX}}} \quad \text{as appropriate}$$

The adequacy of each main component of the battened member shall be checked assuming it to resist, in addition to the axial force, a bending moment about each of the X-X and Y-Y axes equal to $Q_s/4$ together with the effects of transverse external forces, if any and assuming its effective length to be equal to lb1where Q is as defined in **10.8.5.2** and l_{b1}, is as defined in **10.8.3**.

NOTE: Members with planes of battens in opposite faces in which the centres of the battens are staggered may conservatively be treated as if the battens were not staggered.

10.8.6.2 Loads and moments on battens

Add at end:

For assessment (a) and (b) shall alternatively be modified to read:

(a) a longitudinal shear force equal to K_bQ_{rs}/b

(b) a bending moment acting in the plane of the batten equal to KbQrs/b

where K_b is as **10.8.5.2**defined in **10.8.5.2**

10.9.1 General

In the fourth paragraph after 'The strength', *insert* 'of a member as a whole and'.

10.9.2 Inclination of lacing bars

Add at end:

For assessment of a laced member having lacing bars not complying with the above limits to inclination the critical buckling loads and strength of the whole member shall be determined as follows:

The critical loads for buckling about the Y-Y or X-X axes respectively shall be taken as:

$P^1_{EY} = \varphi P_{EY}$, $P^1_{EX} = \varphi P_{EX}$ where φ shall be derived from:

$$\phi = \left\{1 + \pi^2 \frac{A_e r^2}{l^2}\left[\frac{1}{A_l \, Cos\,\theta \, Sin^2\,\theta}\right]\right\}^{-1}$$

Where

A_l is the total cross sectional area of lacings within a laced panel in the appropriate plane of bracings;

θ is angle of inclination of the lacings to the axis of the member;

l = l_x or l_y as appropriate;

r = radius of gyration of the member as a whole about the X-X or Y-Y axes as appropriate;

A_e is the effective area of the whole member determined in accordance with **10.5**;

P_{EY}, P_{EX} are as defined in **10.8.5.2**.

The strength of the member as a whole shall be determined in accordance with **10.9.1** with the radius of gyration about the appropriate axis taken as $\sqrt{\phi}$ times the actual radius of gyration using the value of ϕ appropriate to the axis considered.

The rules for laced compression members for design ensure that the buckling loads of the members as a whole are not diminished significantly as a result of shear flexibility in the planes of the bracings and that individual components do not fail prematurely. When the bracing is inclined to the axis of a member at smaller angles or is relatively light, allowance needs to be made for shear flexibility in the assessment procedure.

The reduction of critical buckling loads given was derived by Timoshenko (ref 10.9.1).

10.9.3 Spacing of lacing bars

Add at end:

For assessment where the spacing of lacing bars does not comply with these requirements, the main components of the member shall comply with the following requirement:

$$\frac{P}{A_e} + \frac{M_x}{Z_x}\left(\frac{1}{1-\frac{P}{P^1_{EX}}}\right) + \frac{M_y}{Z_y}\left(\frac{1}{1-\frac{P}{P^1_{EY}}}\right) \leq \frac{\sigma_c}{\gamma_m\,\gamma_{f3}}$$

where

A_e	is the effective area of cross section of the laced member (see Clause **10.5.2.1**);
P	is the axial load applied to the laced member;
Z_x and Z_y	are the section moduli of the laced member about the X-X and Y-Y axes respectively related to the centroid of the main component considered;
P^1_{EX}, P^1_{EY}	are as defined in **10.9.2**.
M_x	$= M_{ox} + 1.2\ P\Delta_x$;
M_y	$= M_{oy} + 1.2\ P\Delta_y$;
M_{ox}, M_{oy}	are any applied bending moments about the X-X and Y-Y axes respectively in the plane of the lacing including that due to eccentricity of axial load to the centroid of the laced member;
Δ_x Δ_y	are the maximum departures from straightness of the laced member in the directions normal to the X-X and Y-Y axes respectively measured in the plane of the lacings over a length between points of effective lateral restraint to the laced member in the relevant direction;
σ_c	is the ultimate compressive stress for buckling of the main component about its centroidal axis perpendicular to the plane of lacing obtained from σ_c/σ_y in accordance with Figure 37 using l_e equal to the spacing of the lacing bar intersections along the component;
r	is the least radius of gyration of the section of the main component;
y	is the distance from the axis of least radius of gyration to the extreme fibre of the section of the main component;
σ_y	is the nominal yield stress of the material.

Where the slenderness of main components exceeds the limits in the Code, their individual strengths need to be checked. The approximate limiting equation given allows for the use of measured initial departures from straightness which for initial assessment may be based on the tolerances given in BS 5400-6, in accordance with the guidance in **8.5** and **I.2** of **Annex I**.

11. Design of tension members

11.1 General

Add at end:

This section shall cover the assessment of nominally straight members subjected to axial tension or to combined tension and bending. Where members act as compression members under defined assessment loading then they shall be assessed in accodance with 10 unless it can be shown that sufficient redundancy or alterative load path exists in which case such compression may be ignored.

Use of the net area multiplied by some function of the tensile strength of the material has always been adopted for the determination of strength in previous steel codes. For example, the 1923 version of BS 153 applied the net sectional area at a working stress of 124 N/mm^2 (8 T/in^2) on steel which had a tensile strength (not yield strength) of 433 N/mm^2 (28 T/in^2), implying an overall safety factor of 4 against failure. Yield stress as opposed to the ultimate strength was not called for or used as a measure of design capacity until 1948. The implied safety factor of 4 in 1923 compares approximately with the following for grade 43 steel for a tension member resisting only HA live loading:

γ_{fl} x γ_m x γ_{f3} x ultimate/yield

= 1.5 x 1.05 x 1.1 x 430/275

= 2.71

Thus, for many existing structures designed to earlier codes, a higher inbuilt reserve of strength should exist than for a structure designed today for the same loading. Against this the structure will now have to carry heavier loadings and degradation of strength may have occurred due to corrosion. Previous codes contained requirements for maximum slenderness of tension members, in particular BS 153 : 1972 which imposed a maximum slenderness ratio of 140, whereas BS 5400 has no such restrictions except for general comments on robustness. Thus it will be found that tension members of a nominal nature such as bracings will be adequate when assessed although they are within structures designed for lighter loadings.

11.3.2 Effective area

Add at end:

For assessment the value of k2 shall be taken as follows:
1.2 where the member is BS 4360 grade 43 or BS 15 steel;
1.1 where the member is BS 4360 grade 50 or BS 968 steel;
1.0 where the member is BS 4360 grade 55 or Thirty Oak steel;
or

$$1.0 + 0.5\left\{\frac{\sigma_{ULT}}{\sigma_y} - 1.2\right\}$$

but not exceeding 1.2 or less than 1.0, where the member is of steel not complying with BS 4360, BS 15, BS 548 or BS 968 where σ_y and σ_{ULT} are the nominal yield stress and ultimate stress derived in accordance with **6.2** and **6.3** respectively.

The design rules for tension members and connections together with the associated safety factors relate to materials which have specified ultimate tensile stresses which exceed their yield strengths by certain mounts depending on the grade of steel. The margins provided by BS 15 and BS 968 correspond to those for grades 43 and 50 steel in BS 4360.

For steels of other qualities allowance should be made for the ratio of ultimate/yield stress. The modifications to the factor k_2 provide compatibility with a ratio of 1.1 for grade 50 steel and 1.2 for grade 55 steel.

The combined factors of $\gamma_m\gamma_{f3}$ for tension members is 1.16. In order to limit the risk of yielding on a line of holes under serviceability limit state conditions the value of k2 has been limited to 1.2 as permitted for grade 43 steel for which the ratio of ultimate/yield stress is of the order of 1.75. Since the factor only applies to members with holes, overall yielding on the gross section will therefore be avoided.

11.3.5 Pin connected members

Add at end:

Where this requirement is not met, it shall be checked that tearing will not occur beyond the pin hole.

11.4 Thickness at pin holes

Add at end:

Where this requirement is not complied with, it shall be checked that local buckling will not occur beyond the pin hole.

11.6.1 Genera1

Add at end:

Where battens have been incorporated to cater for lateral loading or vibration (or for erection and handling during construction), and the requirements of **11.6.2** to **11.6.7** are not complied with, the battens and their fixings shall be assessed to resist the effects of all-loading to which they are subjected, including wind.

11.7.1 General

Add at end:

Where lacing has been incorporated to cater for lateral loading or vibration (or for erection and handling during construction), and the requirements of **11.7.2** to **11.7.5** are not complied with, the lacing bars and their fixings shall be assessed to resist the effects of all loading to which they are subjected including wind.

11.8.1 General

Add at end:

Where the above requirements are not met, the perforated plate shall be assessed to resist the effects of all loading to which it is subjected including wind.

11.9 Tension members with components back to back

Add at end:

Where the requirements of 10.11.1 and 10.11.3 are not complied with, the members and their fixings shall be assessed to resist the effects of all loading to which they are subjected including wind.

Stability need not be considered, and battens/lacings can be thinner and lighter than for compression members. However local effects should be examined where any requirements are not complied with.

12. Design of trusses

12.1 General

Add at end:

Bending effects shall be ignored in **12.2.2** and **12.2.3** where these are solely due to axial deformation of members where the joints are formed using untensioned bolts or rivets in clearance holes and any secondary bending developed can be relieved by joint movement.

12.1, 12.2, 12.3 General, limit states and analysis

Earlier steel bridge codes catered for the question of secondary stresses (ie those resulting from elastic deformation of the structure and the rigidity of the joints, eccentricity of connections and off-joint loading generally) by methods of which effectively represented percentage stress increases of between 12% and 25% in working stresses when secondary stresses were considered. In the development of BS 5400 it was noted that there had been no major failures of trusses designed to BS 153, nor was there any evidence that designs were excessively conservative. Tests had shown that secondary or deformation stresses were of the order of 20% of the axial stresses for members of the limiting properties given by BS 153, above which they could be ignored. Although limit state terminology was not used in BS 153 trusses were in effect designed to satisfy ultimate limit state, and then checked for the serviceability limit state taking into account all the worst primary and secondary loading effects. The permitted overstresses for HB loading and for secondary stresses had been in effect a way of applying varied partial factors on load effect. BS 5400 therefore makes no drastic departure from BS 153 such that designs to BS 5400 would not differ significantly. The change which has taken place is that secondary stresses could now be evaluated easily by computer frame analysis, whereas previously a pin jointed approach was used.

The existing BS 5400 requirements generally mean that in most practical cases serviceability should rarely be critical for bridges designed to earlier codes or to BS 5400. However there may be some structures designed on a pin-jointed basis that did not rigorously consider the secondary stresses and it is possible that these may sometimes be critical. BS 5400 permits deformation stresses to be ignored at the ultimate limit state, but other secondary stresses due to eccentricity and off joint loading must be included, although only in the middle third of the length of compression members. It is considered that secondary stresses may be ignored altogether where joints are formed using untensioned bolts or rivets in clearance holes because any developed secondary bending will be relieved by joint movement. As far as fatigue is concerned it is generally unlikely that this will govern road bridges except where poor details were used.

Vierendeel or other non-triangulated girders or frameworks may generally be assessed using the requirements of this section, but joints may need to be specially considered, as well as any bending or other secondary effects generated

12.5.2 Restraint to compression chord

Add at end:

Where in assessment of the adequacy of an intermediate U-frame allowance is to be made for initial departures from straightness of a compression chord F_R shall be calculated in accordance with 9.12.2 with ℓ_e in accordance with **9.6.4.1.1.2** or **9.6.4.1.3**, as appropriate with the chord treated as a compression flange.

*Add new clause **12.6.1**:*

12.6.1 Lateral bracing not providing adequate restraint

In cases where any of the provisions of **12.6** are not met in assessment, such bracing shall be ignored and assumed to provide no restraint. However, in cases where partial restraint may be available from any lateral bracing provided, this may be utilized providing it can be verified by a rigorous non-linear analysis of the complete system.

Alternatively, the values of ΣP_f in **9.12.2** could be restricted such that the requirements of **9.12.2** are complied with.

12.7 Curved members

Add at end:

In cases where members are not curved to a circular arc, or do not comply with any of the requirements (a) to (d), they cannot be assessed directly by the use of (e) and other provisions of this Part. Where the requirements of (a) to (d) are only marginally exceeded, it may be possible to use (e) providing a suitable upper bound enhancement factor is applied to the bending moments derived by application of this clause. Where members do not comply with requirements (a) to (d) consideration shall be given to the following:

(1) The forces and stresses according to 9.5.7;

(2) The effects of the change in neutral axis position due to curvature;

(3) The buckling resistance of the section where it does not satisfy the criteria for a compact section;

(4) Flanges shall be adequate to resist the radial component of the flange force. Assuming the axial force in the flange is distributed uniformly across the width, the line load radial force per unit width across the flange per unit length of the flange may be expressed as:

$$\frac{\sigma_f t_{fo}}{R_f} \quad \text{in a flange outstand, or}$$

$$\frac{\sigma_f t_f}{R_f} \quad \text{in a plate panel between longitudinal stiffeners and/or webs}$$

where σ_f, t_{fo}, t_f and R_f are all as defined in **9.5.7.1**.

12.8 Gusset plates

If the limit on gusset plate thickness given is exceeded, then consideration is required to possible instability of the gusset. There is no guidance on this item in previous bridge codes, but the limiting thickness will not often be contravened, since the limit given is similar to limits for proportions of bottom plates in earlier codes.

12.8.2 Detailing

Add at end:

In the case of severe changes in geometric shape such as the presence of sharp re-entrant cuts then stress concentration factors shall be applied.

Where b_g/t exceeds the above limit then local buckling of the gusset plates shall be checked, either by means of a detailed analysis or by means of reducing the yield stress, σ_y, given in 12.8.1 to a value given by

$$0.9 \times 10^6 \left(\frac{t}{b_g} \right)^2$$

14 Design of connections

14.3 Basis of assessment of connections

14.3.1 General

Previous steel bridge codes gave limited guidance on the detailed design of connections. The 1949 code stated that compression members, if faced for bearing, could transmit 50% of the load, the remainder being taken by the fasteners. Where it bears and the web was assumed to contribute to the flange strength, the web splice was also required to transmit bending. Cover plates were required to have an area of 5% in excess of the section increased to 10% if unsymmetrical.

Prior to 1949 it had been practice to design the flanges of girders to resist the bending, and the web to resist the shear, though one-eighth of the web plates could have been included in the estimated sectional area of each of the flanges if the web plates are efficiently covered to transmit the horizontal stresses.

This means that girder web splices in pre 1949 bridges would be likely to be found deficient if, as is now usual practice, the webs and splices are assumed to share in the bending resistance. However, except in the case of HSFG bolts which do not appear in pre 1949 bridges (except as replacements for rivets).

14.3.3.2 permits "plastic analysis" which can be taken to mean that web splices may resist shear only provided the flanges can resist all of the bending. HSFG joints should either be checked for SLS before slip, or at ULS after slip in which case fatigue endurance must be satisfied assuming that the bolts are black bolts, that is a class 'G' detail. This is in accordance with BS 5400-10 and IS EN 1993: Part 1 (reference 14.3.1) which does not allow plastic distribution where shear capacity governs.

14.1 General

Add at end:

For assessment the term 'fastener' also applies to the components of members such as screwed tie rods and turnbuckles.

14.2.3 Serviceability limit state

Add at end:

Where, in assessment, such connections are calculated to slip under serviceability factored loading in accordance with **14.5.4.1.2** and no distress is apparent at the joints (see NOTE 3 in **4.2.2**) they shall be checked under ultimate factored loading in accordance with **14.5.4.1.1(b**) and the fatigue endurance of the joint shall be checked assuming the fasteners to be black bolts. If there is evidence of loose rivets in riveted connections then the fatigue endurance of the joint shall also be checked assuming the fasteners to be black bolts. Fatigue endurance shall be assessed in accordance with **14.2.2**.

Add new clause 14.3.3.3:

14.3.3.3 Assessment

For assessment, elastic analysis shall be used in accordance with **14.3.3.1** for H.S.F.G bolts checked for the serviceability limit state when adopted under **14.2.3**, and when considering the fatigue endurance of welds as required under **14.2.2**. In other cases, plastic analysis shall be used in accordance with **14.3.3.2**.

It may normally be assumed that for the assessment of connections in beams, all the bending is resisted by the flanges along with any associated flange angles, and that shear only is resisted by the web, provided that this is compatible with the basis of the assessment of the member.

14.3.4 Distribution of load to the connected members

Add at end:

For assessment where any part of a member is connected so that the load is not distributed over its effective section, then it must be assumed that the load is dispersed from a fastener onto a connected part within an angle of ± 45° from the direction of the force, unless a detailed analysis is carried out which can substantiate an improved distribution.

14.3.5 Connection of restraints to parts in compression

Add at end:

In cases where the connection cannot resist the forces in (a) and (b) above, the intermediate restraint must be ignored, or the system may be checked making due allowance for the maximum restraint that can be provided, see **9.6**.

14.3.6 Prying force

Add at end:

Where more than one line of bolts or rivets is present, then in the absence of effective stiffening to reinforce the connection, only the inner line of fasteners adjacent to the web must be assumed as effective in resisting the tensile load.

The value of prying force assigned to the force H must be taken as the greater of $P_t/10$, H_1 and H_2,

where:

$$H_1 = P_t \left\{ \frac{\frac{1}{2} - \left(Lt^4 / 30ab^2 A_e\right)}{\frac{a}{b}\left(\frac{a}{3b} + 1\right) + \left(Lt^4 / 6ab^2 A_e\right)} \right\}$$

$$H_2 = \left[\frac{c}{2a} - \frac{1}{8}\right]\left[P_t - \left(F_v Lt^4 / 18ab^2 A_e\right)\right]$$

For notation see Figure 45A below.

14.3.6 Prying force

It is unlikely that the effect of prying forces on tensile connections will have been considered in the design of existing bridges designed prior to BS 5400. Riveted structures generally avoided the use of fasteners in tension so that the absence of prying treatment in previous codes is not likely to be serious for these cases. However, more detailed expressions are available for deriving values of prying force, and these should be used since the minimum value given for design may be unsafe for some situations where the design arrangements are not met or unnecessarily excessive for other cases.

The value of the prying force developed in the fasteners of a connection is dependent on a complex relationship between the bending stiffness of the flange and the axial stiffness of the fastener but generally for a given connection geometry, as the stiffness of the flange is reduced then the prying force increases. The Code requirement that a lower bound value for prying force of 10% of the applied tension in the fastener be considered is an attempt to limit any possible loss of preload due to yielding of the fastener under overload conditions. During design it is possible to notionally utilise any unused capacity in the fastener to resist a prying force greater than the prescribed lower bound value, depending on the stiffness (ie thickness) of flange plate. In this way it is possible in design to produce a notionally balanced connection. This will not be

the case during assessment where the geometry and sizes of the connection components will already be fixed and such a balanced solution may be difficult to obtain. However, in assessment any spare capacity of the fastener can still be utilised to take up the prying force present.

Therefore, in order to quantify the prying force induced in the fasteners of a predefined connection the expressions for H_1 and H_2 are presented which take account of the relative stiffnesses and geometry of the connection components, and/or the effect of bolt preload. The higher value of H_1 or H_2 should generally be used in assessment, as the two expressions cater for the most onerous governing case that can result from different arrangements.

Particular attention is drawn to the problems that may exist with more than one line of bolts. A more thorough analysis may be carried out if use of only the inner line of fasteners proves to be over conservative.

Further background data on prying action is given in references **14.3.2** to **14.3.5**. For notation see Figure 45A, which also gives simplified expressions that may be used in initial assessments in lieu of the full expressions.

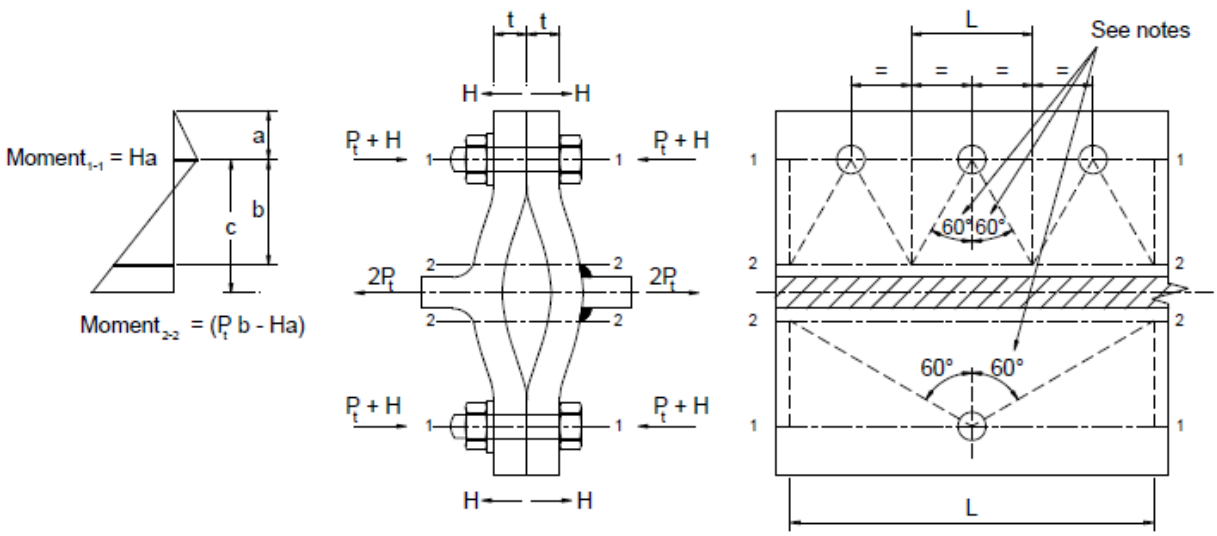

NOTE: L is the limitation on the length of section 1 or 2.
60° is the maximum value of these angles that may be assumed for the spread of P_t from the normal.
A_e is the relevant bolt or rivet area in accordance with **14.5.3.2** or **14.5.3.3.**
F_v is any prestress, see **14.5.4.3**

H may be taken as the higher of the following for initial assessment:

$$\left[\frac{3b}{8a} - \left(\frac{t}{69}\right)^3\right] P_t \text{ (with t in mm), [Douty \& McGuire, ref, 14.3.5]}$$

or $\left(\frac{c}{2a} - \frac{1}{8}\right) P_t$, [Cheal ref. 14.3.4]

which are conservative simplifications of expressions in **14.3.6.**

Figure 45A: Prying force notation

14.4 Splices

In assessment, where single sided covers only are present, it is likely that use of the full eccentricity of the cover and spliced part will significantly reduce the assessed capacity because of the bending stress apparently created.

Although the effect of eccentricity must be considered for single sided splices, it is not just a matter of adding the product of eccentricity and load as a moment in the cover. Tests have demonstrated, for example, that in some circumstances welded single sided covers can develop the full capacity of bulb flats. Careful assessment should be made of the ultimate capacity of any such splices, including, if necessary, a test on a mock-up of the splice detail.

Where bending is effectively prevented by stiffeners, concrete encasure or attachment to a composite slab then only axial effects will be relevant. Where the plates are not prevented from bending then this may occur, but at ultimate load the bending stresses would tend to be redistributed as the joints distort. Hence bending should be considered as a serviceability criterion only, and that in the absence of restraint from surrounding construction, bending stresses may be calculated assuming that the line of action of force is located along the joint interface.

14.4.1.1 General

Add at end:

The following assumptions shall be made for assessment:

a) Where both surfaces of the spliced parts are provided with covers then axial stresses shall only be assumed in design.

b) Where only one surface is provided with covers, then bending effects are to be considered at the serviceability limit state, but may be ignored at the ultimate limit state. For the calculation of bending effects it may be assumed that the line of action of the axial force in the splice is located along the interface between the parent material and the cover. The effects of eccentricity shall be ignored when bending is effectively prevented by:

i) the presence of surrounding or adjacent concrete or other solid infill, or

ii) the presence of an element which prevents bending of either the parent material or the cover. This element shall be within a distance of 12t from the furthest fastener where t is the thickness of the parent material to which the cover plate is attached.

*Add new clause **14.4.5**:*

14.4.5 Obsolete splicing methods

In older bridges, limitations on thickness of plate which could be rolled meant that several plates were required to build up the required section thickness. When assessing splices in such section, consideration shall be given to the load path through the joint to ensure no single component is overloaded, see Figure 14.4A and B.

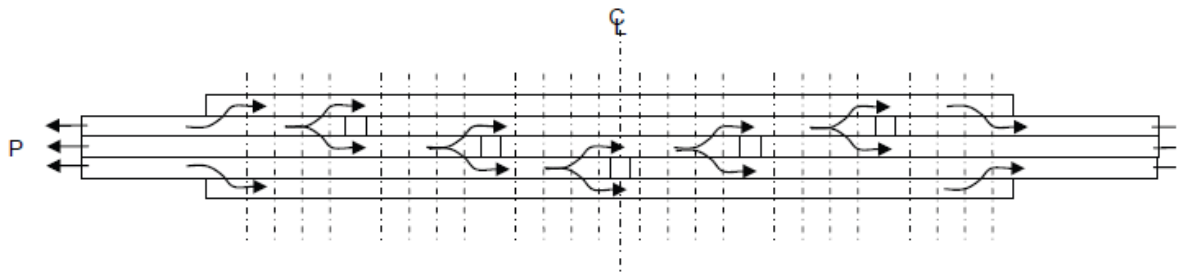

Figure 14.4A Force flow in typical plate shingle joint

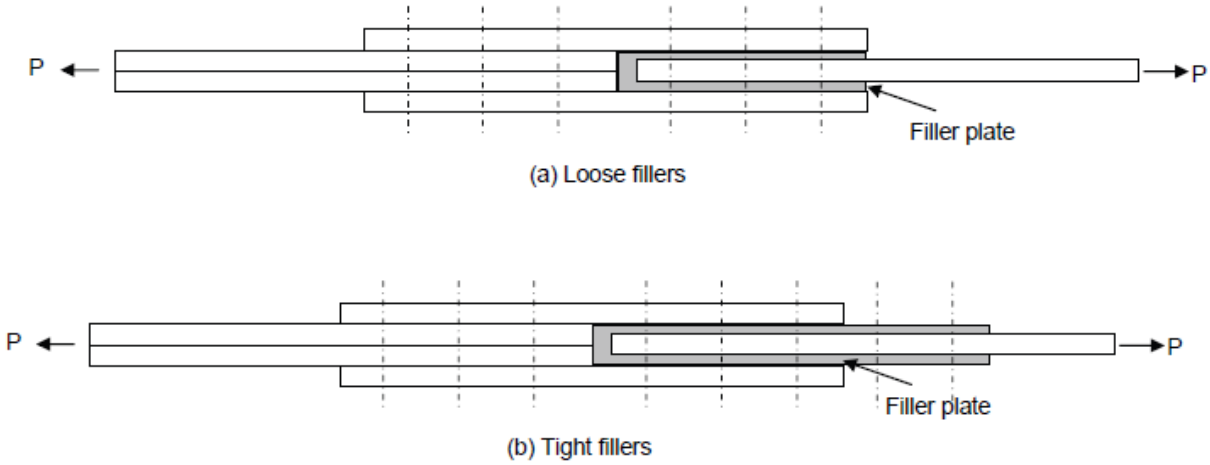

Figure 14.4B Types of filler plates.
(a) Loose fillers, (b) Tight fillers

*Add new clause **14.5.1.5**:*

14.5.1.5 Assessment of non-complying arrangements

Where any of the limits in **14.5.1.1**, **14.5.1.2**, **14.5.1.3** or **14.5.1.4** are not complied with, allowance shall be made for a reduced strength of the fasteners or plate in assessment where there is evidence of plate bulging, distortion near or to fasteners or excessive rust forming. Reductions in strength shall also be applied to the following cases:

a) Where the parts joined are in compression and the distance S_a between centres of adjacent rivets or bolts exceeds S_s, the maximum specified according to **14.5.1** requirements, in the direction of stress, reduce yield stress of outer plies concerned by $(S_s/S_a)^2$.

b) The gauge limit in **14.5.1.3** may be increased to 80 mm in determining the specified maximum spacings under **14.5.1.3**.

14.5.2 Edge and end distance

Add at end:

Where any of the above limits are not complied with the strength of the fastener or plate shall be reduced for assessment purposes as follows:

1. *Between fasteners, away from an edge* – When the spacing between two fasteners is less than 2.5 times the diameter of the shank of the bolt or rivet, the strength of each should be reduced in linear proportion to a value of zero when the spacing is 1.5 times the shank diameter. Where a fastener is close to more than one other, the reduction factors should be multiplied together.

2. *Fastener adjacent to an edge parallel to the direction of force* – The value of k_2 in **14.5.3.6** should be linearly reduced from the value 2.5 when the edge distance is 1.2d to a value of zero when the edge distance is 0.8d.

3. *Fastener adjacent to an end, force away from the edge of the part* – No reduction need be made, subject to a minimum end distance of 0.8d. For a lesser distance, the fastener should be ignored.

4. *Fastener adjacent to an end, force toward the edge of the part* – The value of k_2 in **14.5.3.6** should be reduced linearly from the value of 1.2 when the edge distance is 1.2d to a value of zero when the edge distance is 0.9d.

5. *Friction capacity of HSFG Bolts* – When the spacing between fasteners is less than 2.5d, the friction capacity should be reduced in linear proportion from a value of 100% of the normal capacity at 2.5d to 80% of the normal capacity at 2.0d. Below 2.0d, the fasteners should be ignored.

When the edge distance is less than 1.5d, the friction capacity should be reduced linearly to a value of zero when the distance is 1.0d.

Where maximum spacings are exceeded the buckling of thin outer plies in compression should be considered, taking account of actual arrangement of the splice. Where minimum spacings do not comply with limits in this clause, the strength of the fastener or plate should be reduced. Simple empirical rules using reduction factors may be applied for this purpose, such as given in (a) to (c) below.

Where strengths are mutually affected by more than one limit, the resulting reduction factors should be multiplied together.

(a) *Bolts and rivets in bearing* – Where the spacing is less than minimum spacings of **14.5.1.1** or the edge and end distance of **14.5.2**, the limiting bearing capacity of the fastener should be reduced. This depends on position of the fastener and the direction of load.

(b) *Maximum pitch requirements* – Maximum pitch requirements are intended to avoid corrosion by ensuring that the plates are kept sufficiently close together for the paint film to be able to seal any gaps between the plates.

Additionally, where the plates are in compression, the requirements will prevent local buckling of the plates. Where the requirements are not met, the following guidance may be used in the assessment of the connection:

1. When the parts joined are in tension or shear, the connections should be examined carefully to determine whether any corrosion has occurred, and if so, appropriate allowance made. Away from edges, this examination may have to be limited to any signs of corrosion around bolt heads or nuts, or bulging of plates. In the absence of such evidence, no reduction of strength need be assumed.

2. When the parts joined are in compression:

   i) The limits related to the thickness of the material may be assumed to be required to prevent buckling of the outer plies. Where a connection does not comply, a reduced yield stress of the outer plies should be used, with the reduction factor taken as:

   $$\left(\frac{k_o}{k_a}\right)^2$$

   where

   ko is the specified maximum multiple of t

   ka is the actual multiple of t.

   The lesser value of the reduction factor in the two directions should be used and it should in no case be taken as greater than 1.0

   ii) The limits quoted as absolute dimensions may be treated as in (1) above.

3. The same approach as in (1) and (2) above may be used for connections with staggered spacing, with the 80mm gauge length being treated as in (1) above. The value of 80mm has been used since it is believed that many existing bridges may have a gauge length of 3 inches, i.e. greater than the 75mm used in the design code, but for which no reduction is really needed.

4. A similar approach to 2(i) above may be used in cases of non-compliance with 14.5.1.2. However, in this case the reduction factor for yield stress, to be applied to the plate or other part subjected to compression or shear should be taken as:

   $$\left[\frac{b}{4S_a}\right]^2 \text{ but not greater than 1.0}$$

where S_a is the actual spacing between the centres of the two consecutive bolts or rivets connecting the stiffener to the plate or other part subjected to compression or shear.

(c) *Diameters of holes* – To determine actual diameter, d, of the hole, and whether holes have been reamed, it may be necessary to remove sample bolts.

The diameter of the hole must be taken as given on record drawings, where these are available, or in the absence of any detailed information, as normal clearance holes. Where there is reason to suggest that the holes may be oversize, this must be investigated or a suitable allowance made.

Normal clearance holes may be taken as 2mm greater than the bolt diameter for bolts smaller than 27mm and as 3mm for bolts of 27mm and over.

14.5.3 Strength of fasteners other than hsfg bolts acting in friction

14.5.3.1 General

Add at end:

Where any of the general or specific requirements of this or any of the following sub-clauses are not met in assessment, due allowance shall be made on the strength of the fasteners. Where black bolts have been used in permanent main structural connections, their assessment shall include a fatigue check, i.e. generally as Class G detail. Bolts shall be assumed to be black bolts and rivets shall be assumed to be hand driven, unless there is evidence to the contrary.

As an alternative, the requirements in IS EN 1993-1-8 to determine the strength capacity are permitted to be used in assessment. Such capacity is based on the ultimate strength of the bolts or rivets rather than the yield stress. When using Eurocodes partial material factors as specified in that document shall be used.

14.5.3.1A General

For structures to imperial units, reference should be made to contemporary standards for the limiting sizes of holes. Typically, clearance holes were taken to be 1/16"(1.6 mm) larger than the bolt; rivet were driven in holes 1/ 16" (1.6 mm) greater than their nominal diameters.

Where holes are greater in diameter than assumed in design it can not be assumed that the connection will develop its full capacity before excessive deformation or premature failure of individual bolts will result. Connections must be considered on a case-by-case basis to determine an appropriate lower bound value of the strength.

For rivets tests have shown that the actual strength capacity often exceeds that shown by calculations. Consequently testing of connections may show greater strength than that specified in the standards and is advisable.

14.5.3.2A Bolts subjected to axial tension

The tensile area of the bolt should be that given in BS 3692, BS 4190 or BS 4395, where these are appropriate. Where other standards are known to be appropriate, values from them may be used. If the relevant manufacturing standard is not known, a value of 60% of the shank area may be used.

Similarly, the value of σ_t may be taken from the relevant standard where it is known. If the relevant standard is not known a minimum value of 230 N/mm^2 may be presumed in most cases.

Alternatively, tensile tests may be carried out on a statistically significant sample of bolts taken from the structure, see also **4.3.3A**.

14.5.3.3 Rivets subjected to axial tension

Add at end

The tensile capacity shall be reduced where there is significant loss of rivet heads. Where rivets are subject to tension due to live loads then σ shall be reduced to that for countersunk rivets where the remaining effective head diameter is down to 1.3 times the nominal diameter. If the remaining effective head diameter is less than 1.3 times the nominal diameter then σ shall be reduced to zero. Where the size of the rivet hole is not known, rivets shall be removed to determine the size of the hole. The size of all rivets removed shall be noted. Where other rivets have a different head size, samples shall also be removed for determination of hole size.

When a rivet is missing or has been removed for inspection the hole shall be sealed to prevent corrosion. Where the strength of the connection is inadequate because of the missing rivet(s), additional capacity may be gained by reaming the hole and fitting a close tolerance bolt. HSFG bolts may only be used for this purpose acting in friction at ULS; slip is prevented by the rivets presumed that any clearance bolt would act in bearing/ shear.

14.5.3.8 Long grip rivets

Add at end:

It should not normally be found that the grip of a rivet exceeds eight times the diameter of the hole. If longer rivets have been used, the connection shall be inspected carefully for any signs of slip or separation at any of the interfaces.

14.5.3.9 Securing nuts

Add at end:

HSFG bolts shall be tested for tightness of fit and uniform surface contact, see **I.6**. Bolts with obvious signs of movement (e.g. paint cracking, slackness of fit) or considered suspect after light hammer tapping shall be given more detailed examination and replaced as necessary. Re-torqueing of HSFG bolts shall not be permitted.

14.5.4 Strength of HSFG bolts acting in friction

14.5.4.1 General

Add at end:

Friction grips bolts of types, arrangements or tightening not in accordance with this or any of the following sub clauses shall be assessed by reference to **14.2** and published data relating to the bolt type or by tests on selected bolts in the structure.

14.5.4.2 Friction Capacity

Add at end:

Where bolts have been tightened in accordance with BS 4604, the condition of the friction surface during installation is known with confidence and there is no evidence of contamination, the partial factor γ_m shall be taken as 1.30 at the ultimate limit state and 1.20 at the serviceability limit state, and μ may be taken as given in **14.5.4.4**.

Where circumstances are different from the above, appropriate partial factors and slip factors shall be determined, taking into account the probable prestress in the bolts and the condition of the friction surfaces.

The determination of values for γ_m should be based on the methods given in **4.3.3**.

Where the condition of the friction surface is unknown and it is impracticable to remove any cover for inspection, a value of not greater than $\mu = 0.10$ shall be used.

14.5.4.5 Oversized and slotted holes

Add at end

If the size of the holes is larger than the limits in the Table or cannot be confidently taken to lie within the limits, the performance of the connection shall be assessed on an individual basis, paying particular attention to the likely condition of the interfaces and the consequences if slip were to occur.

Alternatively, the capacity of all bolts in holes which do not comply with the limits may be taken as zero. The adequacy of the connection then depends on the capacity of the remainder of the bolts. Values of k_h should not be extrapolated to less than those quoted above. Such values may only be adopted if verified by testing.

14.5.4.1A to 4 General, friction capacity, prestress and slip factor

Normally only ULS is to be assessed, but see assessment criteria given in **14.2.3**. In most cases the shear/bearing capacity will determine the strength of the fasteners.

Where waisted shank bolts are used and slip is evident, and the bolts are thus in bearing/shear, each bolt should be inspected to confirm that it has not fractured. The strength of the fastener must then be calculated as for a bolt in bearing/shear based on the waisted diameter.

14.5.4.5 Over-sized and slotted holes

Where the clearance around HSFG bolts is greater than that in normal clearance holes the potential movements if slip should occur is greater. There is also a greater risk of impact and consequent fracture of the stressed bolt if a sudden slip occurs. In such circumstances it is usual to specify a higher factor against slip and this can be achieved by applying the reduction factor k_h to the calculated friction capacity.

Where it is known or confidently believed that the size of the holes complies with Table 12 k_h may be taken as 0.85 for over-sized and short slotted holes, or 0.70 for long slotted holes. The Table may be interpolated for use with imperial sizes and minor infringements arising from conversion may be ignored. The reduction should be applied if the hole in any of the piles is greater than normal.

14.6 Welded connections

14.6.1 General

Add at end:

In assessment of bridges known to have been welded in accordance with BS 5400-6 or BS 5135: 1974 (or 1981), the strength of the welds shall be determined as given by **14.6.2.3** and **14.6.3.11**. In assessment of bridges not known to have been welded in accordance with BS 5400-6 nor with BS 5135: 1984 (or 1981) the strengths of the welds shall be derived in accordance with (a) to (d) as follows.

(a) For butt welds in compression and butt welds in tension or shear demonstrated to comply with BS 5135: Table 18 quality A, the strengths may be taken as defined in **14.6.2.3**.

(b) For butt welds in tension or shear free from surface cracks but not known to comply with BS 5135: Table 18 quality A the strengths shall be taken as 85% of those derived from **14.6.2.3**.

(c) For fillet welds in bridges constructed to BS 153: Part 1: 1958 or 1972 and free from surface cracks the strengths shall be taken as 90% of those derived from **14.6.3.11** in the absence of demonstration of their compliance with BS 5135: Table 19 quality A or equal to those strengths when such compliance has been demonstrated.

(d) For other fillet welds free from visible surface cracks the strengths shall be calculated in accordance with **14.6.3.11**, but replacing σ_W=[1/2 (σ_y + 455)] by 0.4(400 + σ_{ymin}) in the absence of demonstration of their compliance with BS 5135: Table 19 quality A, or by 0.5(400 + σ_{ymin}) when such compliance has been demonstrated, where σ_{ymin} is the yield stress of the weaker of the parts connected by the welds.

Where any of the general or specific requirements of this or any of the following sub-clauses are not met, due allowance shall be made in the assessment of the strength of welds.

14.6.1 General

Due account should be taken where welds are not detailed in accordance with requirements of the Code. A reduced strength should be derived and fatigue implications considered taking due account of any contribution of the following:

(a) Welds not detailed to BS 5135 or of yield stress less than that of parent material (**14.6.1**);

(b) Use of intermittent or partial penetration butt welds (**14.6.2**);

(c) Fillet welds with excessive gaps, incomplete end welds or returns, end connections with non-complying side fillets or overlaps and packings not trimmed flush (**14.6.3**);

(d) Use of non-complying plug welds (**14.6.4**);

(e) Welds with defects.

Often it will not be known whether welds had been detailed to BS 5135, (ie with root face and gap dimensions as recommended), but this should not be detrimental provided appropriate procedural and production testing was undertaken at the time of construction.

It can reasonably be argued that bridges constructed since 1974 (ie at publication of BS 5135) will have been welded to BS 5135 such that their weld metal yield strength should at least be equal to that of the parent metal, and that full penetration was likely to have been achieved in the butt welds where this was intended. The same are also likely to be true for bridges welded to the earlier standards BS 1856 and BS 2642. However at that time the sensitivity of equipment for non-destructive testing of welds was such that significant hidden defects could remain undetected, whereas visible defects would have been discovered and repaired. Except in cases where other evidence is available, it would therefore appear prudent to downgrade the strength of welds in bridges built prior to 1974 where hidden defects or lack of penetration could be significant, ie in butt welds.

It should be appreciated that all welds contain defects of one sort or another, there being no such thing as a perfect weld. Defects such as porosity and minor lack of penetration will not significantly affect strength. BS 153: 1972 allowed butt welds to be treated as parent metal. Permissible stresses in fillet welds were between 0.43σ_y for Grade 43 to 0.37σ_y for Grade 50. Allowing for the factor of safety of 1.7 in BS 153, the corresponding values from BS 5400 are 0.43σ_y for side fillets in Grade 43 and 0.35σ_y for side fillets in Grade 50. It appears, therefore, that although BS 5135 was not available, the BS 5400 strengths were considered to be satisfactory in 1972. The value of γ_m used at ultimate limit state in the Code for fillet weld strength is increased from 1.1 to 1.2 by BD 13/90. The value of 1.1 was based on the calibration of pre 1974 results.

The strengths of welds in bridges built before 1974 should therefore be downgraded unless evidence is available that welds comply with modern standards. It is not easy to stipulate a value for γ_m to represent a downgrading because γ_m already varies depending upon the type of member. The simplest way is to reduce the yield stress of the weld metal. The measure of strength reduction due to the presence of weld defects is addressed by BSI publication PD 6493 in detail, but a basis for assessment is to assume that the strength of the welds are downgraded by a maximum of 15% unless there is evidence that the weld complies with say, BS 5135 Table 18 quality A by results of n.d.t either at the time of construction or since, with the option of increasing to full strength if the welds comply with BS 5400-6 quality.

14.6.2.1 Intermittent butt welds

Delete the existing clause and substitute the following:

In the assessment of intermittent butt welds any contribution to strength of the weld at each end of any intermittent length, a length equal to three times the throat thickness shall be ignored.

It is unlikely that the intermittent butt welds will often exist. They are not used in new construction because full penetration is difficult to guarantee at weld ends, but there is no reason why their strength should not be taken into account in existing structures. Arbitrarily it is proposed to deduct the contribution of the weld ends equal to approximately three times the throat thickness. The existing clause also requires weld reinforcement to be ignored in assessing weld size. There seems to be no reason for this for assessment.

14.6.2.2 Partial penetration butt welds

Add at end:

The strength of partial penetration butt welds shall be calculated as for fillet welds. For single sided joints where transverse bending causes tension across the root then the yield stress of the weld metal shall be taken as 50% of the weaker of the parts joined in assessing the resistance to transverse bending. However, partial penetration butt welds in non-fatigue prone connections could be assessed by reference to BS 5950. Eccentric welds need to be specially considered.

Unless known to have been tested through procedure trials at the time of construction or demonstrated by testing, the throat thickness of a partial penetration butt weld shall be taken as 90% of the nominal.

The Code effectively bars the use of partial penetration butt welds under tensile stress and was drafted to avoid designs where cross bending is applied to single sided welds such that the root is operating at peak tension. However, in many cases partial penetration welds are provided as part of a two sided joint and any tension is applied to the joint as a whole and cross bending does not put the root into tension.

In assessment it is proposed that partial penetration welds be treated as for fillet welds when they are not eccentric. Where single sided welds occur then the tensile stress in the root is limited arbitrarily by assuming that the yield stress of the weld metal is 50% of the strength of the weaker part joined.

Add new clause 15.

15 Outmoded forms of construction

15.1 General

Some outmoded forms of construction cannot be directly assessed even by the assessment clauses above. This section gives guidance and methods of assessment for certain specific outmoded forms of construction. Any outmoded forms not covered within this section shall be assessed by the relevant section of the standard where possible. Where necessary additional studies, special analyses and tests may be beneficial to the type and form of outmoded construction encountered, to supplement the assessment checks carried out.

The need to assess the load carrying capacity of existing steel bridges poses certain difficulties in the application of modern codes of practice to structures which may be up to 100 years old. Their strength of materials, design philosophy, implicit factors of safety, modes of construction, specification criteria and live loadings may have all changed in the period since construction. In particular outmoded forms of construction could present difficulty for assessors more familiar with modern methods.

It was considered appropriate to include assessment methods of outmoded forms of construction which may be present in the bridges likely to be assessed and which are not covered explicitly by current codes. To ensure relevance of assessment to actual structures a study has been made of sample metal bridges built between 1848 and 1958 where drawings were available. Some of these are used for comparison with new standards together with the new approach now proposed.

15.2 Buckle plates

15.2.1 General

Buckle plates consisting of vertically curved steel plates supporting ballast or non-structural filling and spanning between supporting steel members shall be assessed by 15.2.2 or 15.2.3 as appropriate.

15.2.2 Spans of 1.2 m. or less

Where the clear span measured between edges of supporting members is 1.2 m. or less and complies with the following:

(a) rise between $^{1}/_{23}$rd and $^{1}/_{18}$th of the clear span, and

(b) plate thickness is at least 6 mm,

the strength shall be assessed assuming arch or catenary action where the horizontal thrust may be taken as:

$$\frac{wL^2}{8r} \text{ per unit width}$$

where

w = pressure on surface of plate due to dead loads and dispersed live load. Dispersal may be assumed as 1:1.The pressure calculated should be assumed to occupy the full area of the plate,

L = spans of buckle plate between edges of supporting members

r = rise of buckle plate.

15.2.3 Spans of more than 1.2 m

When domed (ie concave upward) buckle plates are checked as straight compression members in accordance with 10.6 with η taken as a (λ - 15) the effective length shall be not less than 0.25L when calculating the value of σ_c. When suspended (ie concave downwards) buckle plates are checked as tension members under axial load, **15.2.2** shall be met. The fixings and the supporting members shall be capable of resisting the horizontal thrust. Concentrated wheel loads over the plate may be dispersed at 1:1.

15.2 Buckle plates

Buckle plates are an outmoded form of floor construction in which curved or "buckled" steel (or wrought iron) plates span between supporting beams, covered by non-structural filling or finishes. They were formed from square or rectangular panels, but sometimes were made in lengths having several buckles to form multi-bay panels or were stiffened in the direction of the span. Others used domed plates which were pressed in 2 directions. Sizes were usually from 0.91m. to 1.83m., plate thickness 6.3mm. to 12.7mm. and rise about $^1/_{12}$th to $^1/_{18}$th of the span. Buckle plates may be either arched (concave upward) or suspended (concave downward).

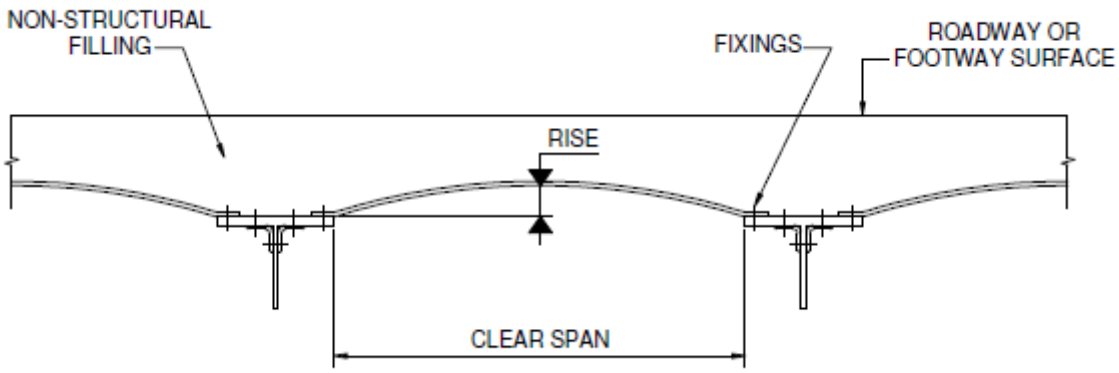

Figure 15.2A: Buckle plates

They were normally riveted or bolted down to the supporting steelwork. One reference noted that buckle plates were unsuitable for supporting block pavement under concentrated moving loads. There appears to have been little information available or load capacity or methods of design, but 1920 "Arrol's Bridge & Structural Engineer's Handbook", from experiments with arched wrought iron plates 0.91m square and with 50mm rise, provided some capacities, see ref **15.2.1**.

Comparison of these capacities with notional calculations based on various design approaches are shown in the Table below, assuming uniformly distributed loading and a "working stress" approach assuming mild steel at 165 N/mm^2 bending stress.

plate Thickness mm.	Arrol 1920 Handbook	Flat Plate		Suspende	Arched
		Encastré	Simply Supported	Thrust = $\frac{wL^2}{8r}$	Buckling Assuming strut with le = $\frac{SPAN}{2}$
6.2	54	24	18	502	40
7.9	75	38	28	629	76
9.5	100	55	41	757	129
Buckle Plate 0.91m. square, supported 4 sides. Capacity for u.d. loading compared with 1920 Arrol Handbook, Safe u.d.l. in kN/m^2.					

These results show that buckled plates derived some benefit from arching action, but that full horizontal thrust capacity is probably not available. It is seen that a reasonable comparison is reached assuming that the plate when acting as an arch is analogous to a strut having an effective length equal to half the span. Clearly in practice the capacity depends on:

(i) Span, plate thickness and rise;

(ii) Whether supported, or stiffened, on 2 or 4 sides;

(iii) Form of filling, loose or solid;

(iv) Resistance to thrust by connections and capacity of supporting members;

(v) Uniform or concentrated loading.

In order to establish a fully reliable assessment method it would be necessary to undertake research by testing. The number of different forms of buckle plates means that this could be extensive. It is unwarranted compared with the number of bridges likely to be remaining in service carrying traffic loading on buckled plates, because often they occur beneath footways only. A simple and conservative approach is therefore proposed for checking the capacity of buckle plates typically encountered, based on the available information given above and upon judgment.

It is proposed to use a simplified approach based on arch or catenary action as appropriate for spans up to 1.2m. only, with rise between $t^1/_{12}$th to $^1/_{18}$th of the span, where the plates are riveted or bolted down on at least 2 sides, unless testing or other information is made available. In other cases and where it would otherwise be necessary to downgrade the capacity of the structure as limited by the resistance to thrust afforded by the fixings or supporting members, then a flat plate approach may be assumed. As an alternative to **15.2.3** for spans of more than 1.2 m, the buckle plate may be considered as an encastre flat plate in which case the effects of horizontal thrust may be ignored.

For wheel loads it is proposed that they be dispersed down to the plate surface at 1:1 for solid filling and at 1 (horizontal) or 2 (vertical) for loose filling. The resulting intensity of wheel pressure at the plate is then taken as though it occupied the full span of the plate as far as the calculation of thrust is concerned.

Unless the fixings are inadequate, the plate can be checked as an arch/catenary. For an arched plate the limiting compressive stress is calculated as for a strut with effective length extending from the end of the span to the intersection point with the wheel distribution. Fixings to the supporting members or other means must be capable of resisting the horizontal thrust.

15.3 Joggled stiffeners

15.3.1 Joggled stiffeners acting as transverse web stiffeners other than at supports

Joggled or knee type stiffeners are considered as transverse web stiffeners. Where an axial force resulting from application of **9.13.3.1 (c), (d), (e)** and **(f)** can be applied to joggled or knee type stiffeners other than within the straight portion between joggles, then the additional bending stress introduced by the shape of the stiffener shall be included within the joggle height when checking yielding of the stiffener under **9.13.5.2**.

(a) For joggled stiffeners the bending stress is calculated assuming that a bending moment is applied to each stiffener leg equivalent to its axial load multiplied by an eccentricity equal to one half of the joggle offset.

The joggle height over which the bending stress can be included shall be taken as at the level of the joggle and extending to the first fastener either side which connects the stiffener to the web.

(b) For knee stiffeners the bending stress is calculated assuming that a bending moment is applied to each stiffener leg equivalent to its axial load multiplied by an eccentricity equal to one half of the horizontal distance from the centroid of the stiffener to the point of intersection of its flange with the beam flange.

The height, over which the bending stress is to be included, shall be taken as from the flange in contact with the stiffener to the first fastener where the stiffener is connected to the web.

15.3.2 Joggled stiffeners acting as load bearing support stiffeners

Gusseted joggled or gusseted knee stiffeners can be considered as load bearing support stiffeners. Joggled or knee type stiffeners as considered are potentially unsuitable, but where they occur additional bending stress is introduced due to the shape of the stiffener and shall be assessed when applying **9.14.4.1**. The additional bending stress may be calculated in accordance with **15.3.1**.

15.3.3 Assessment of joggled stiffeners

9.13 and **9.14** have only been addressed above as far as specific criteria for the assessment of joggled stiffeners is concerned. The criteria for assessment of such stiffeners shall use the relevant sub-clauses of **9.13** or **9.14** as appropriate to derive effective sections and loading and assess the strength. In addition, consideration of limitations on shape shall be addressed in accordance with **9.3**. Further guidance on the typical form of joggled stiffeners is given below.

15.3 Joggled stiffeners

Joggled stiffeners to beams are an outmoded form which was used in riveted construction where the necessity to employ flange angles interrupted the web depth. This meant that stiffeners were "joggled" to clear the vertical leg of the flange angles. The alternative was to insert packings between stiffener and web as practised when the stiffeners acted as bearing stiffeners. The different types which were used are shown below.

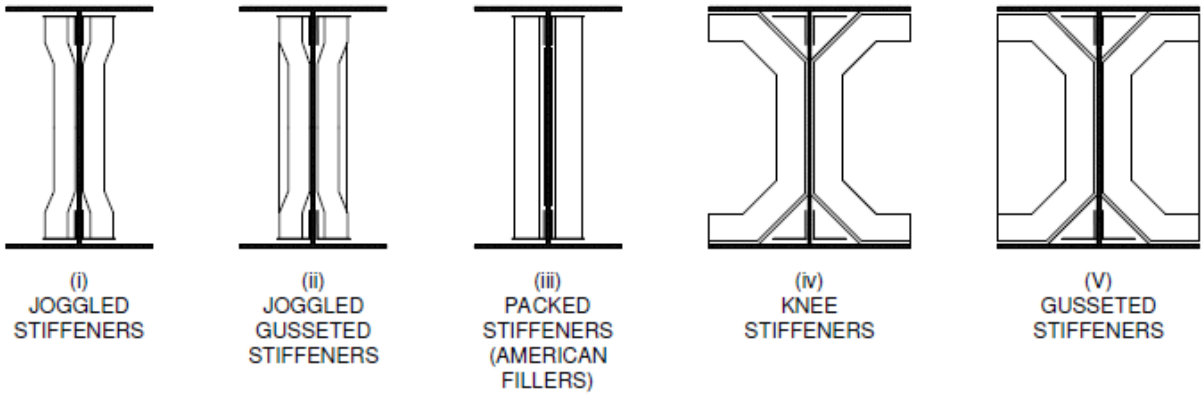

Figure 15.3A: Types of structures in riveted construction

Either joggled or knee stiffeners ((i) & (iv) above) introduce a local eccentricity which could reduce their strength (although no experimental work is known) in carrying a significant axial load, i.e. as a bearing stiffener, but much less likely to reduce their effectiveness as intermediate stiffeners. This had been appreciated in the drafting of old codes such that it is unlikely in practice that joggled or knee stiffeners will exist except as purely intermediate stiffeners. For example BS 153: 4:1937 stated "stiffeners over the bearing plates must have packings between them and the web plates of the thickness of the flange angles, and of the full width of the stiffeners, but intermediate stiffeners may be joggled over the flange angles". Similar statements appeared in later editions including BS 153: 4:1972 and in BS 449: 2:1969 although by this time riveted construction was virtually defunct.

Where stiffeners act as bearing stiffeners then either packed or gusseted stiffeners would appear to require no special assessment over existing BS 5400 requirements. Joggled or knee types deserve consideration, although it seems unlikely that many will exist because of the requirements of the old codes. It is proposed that where joggled or knee stiffeners carry external loads then the effect of the eccentricity be considered. For joggled stiffeners it would appear reasonable to require that allowance be made by addition of a local bending stress under Clause **9.13.5.2** only (yielding check), calculated assuming an eccentricity equal to half the joggle offset. The stress would be added only in the vicinity of the joggle, i.e. extending between the connecting rivets on either side, and would not affect the buckling check under **9.13.5.3**.

For knee stiffeners the eccentricity is potentially greater assuming that axial load is also applied towards the flange edges (as at a bearing which is full flange width) will not merely act at the web position. It seems reasonable to assume that the eccentricity is equal to half the distance from the stiffener centroid to the point of contact in the flange.

16 Bearings and bearing areas

16.1 General

Bearings shall be assessed to BS 5400-9 where appropriate. Steel bearings of types outside the scope of BS 5400-9 shall be assessed using BS 5400-3, where BS 5400-9 is not applicable. Assessors shall include an allowance for load effects resulting from movement restraint where freedom of the bearing is restricted or impaired.

16.2 Beams without bearings

Where beams do not have discrete bearings and bear directly on concrete, brickwork, or masonry substructures with or without a bearing plate or other distributive layer then the local distribution of load to the substructure shall be assessed taking due account of any rotation or movement. Patch loading to the web of the beam shall be assessed in accordance with 9.9.6 where appropriate.

16.3 Pressure distribution under bearing areas

Where the end of a beam bears directly on a substructure without bearings a linear pressure distribution ias assumed varying from a maximum at the inner face of the contact area down to zero at the far face or free end of the girder. The assumed length of the contact area shall not exceed the length of girder in contact, or the depth of the beam if less. For distribution transversely or in other directions as appropriate, a dispersal angle of 2 horizontal to 1 vertical shall be assumed through any flange angles, flange plate(s) and bearing plate (s) present onto the surface of concrete, brickwork, masonry or other material of the substructure. The effective span of the beam shall be assumed to extend from the centroid of the contact area determined.

16.4 Maximum pressures under bearing areas

For concrete substructures the compressive stress in the contact area shall not exceed those given by BS 5400-4. Where inspection shows no evidence of local spalling, cracking or similar distress beneath bearing areas then the limiting strength in compression for unreinforced concrete may be increased by a maximum of 50%.

For masonry bed stones, stresses shall not exceed 0.4 f_{cu} where f_{cu} is the characteristic compressive strength of the masonry. This value is increased to 0.6 f_{cu} where inspection shows no evidence of local spalling, cracking or other distress. Bearing loads shall be assumed to disperse at an angle of 1: 1 down to supporting coursed masonry or brickwork.

The main area requiring guidance is for those bridges which do no possess bearings in the modern sense. Early Guidance is given on the assessment of bearing areas for bridges which do not possess specific bearings. The most critical feature is likely to be the strength of existing masonry or concrete beneath the girder ends where the distribution of vertical load may be uneven due to rotation. The strength of the girder end itself is addressed under assessment methods dealing with patch loading which is mainly intended for bearing areas. The transfer of horizontal loadings, especially longitudinal forces, may also be uncertain. As far as temperature restraint effects are concerned it is likely that structure will be showing signs of distress, such as by local spalling of masonry, where temperature effects have been relieved. The specific assessment of inbuilt temperature effects is therefore considered of secondary importance and is mainly a question of unserviceability.

For stresses on existing masonry or concrete beneath girder ends a linear pressure distribution varying from a maximum at the front of the contact area to zero at the rear may be assumed, the length considered being limited to the length of the girder in contact or the depth of the girder if less. It follows that the centroid of pressure so determined would define the effective span dimension of the beam, as shown in Figure 16.1A.

For distribution transversely a dispersal at 2 horizontal to 1 vertical from the stiff bearing width may be assumed i.e. from root of flange angles or the bearing stiffeners though the flange angles, flange plate(s) and bearing plate(s) (if any) on to the top of the masonry. This assumption follows that in BS 153.

Regarding the safe bearing pressure, the compressive strength of the masonry should be derived by testing where possible. Failing this, published information of guidance on strengths of different materials quoted in NRA BD 21 standard should be used.

For plain concrete, CP111: 1970 defines a safe basic bearing pressure of $U_w/4$ increased by 50% for local concentration to 0.37 U_w.

This compares with 0.4 f_{cu} in BS 5400-4 under factored loading, increased to 1.0 f_{cu} where suitable measures are taken to prevent splitting or spalling of the concrete. From sample calculation it would appear likely that bearing capacities will often be severely limited on the basis of the above distribution when bearing plates or bearing stiffeners are either not present or are limited in extent. In these circumstances it is likely that high peak stresses will arise beneath beam ends, but that failure is prevented by local containment. Hence the BS 5400-4 limiting strength may be enhanced by 50% provided that there is not evidence of spalling or splitting when inspected.

It would appear appropriate to apply similar assumptions to masonry bed stones and a 1:1 dispersal down to brickwork or coursed masonry abutments may be made, and limiting pressures appropriate to masonry structures would apply.

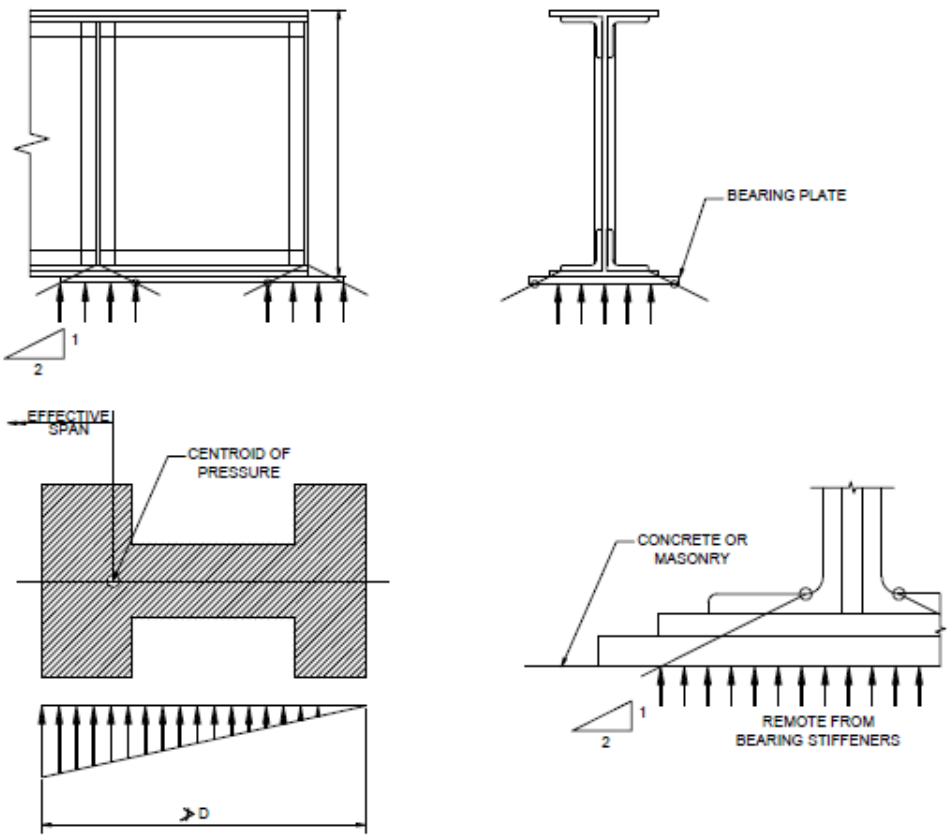

Figure 16.1A: Distribution of pressure through bearing areas

Annex G (Informative)

Equations used for production of curves in Figures

Annex G.8 Limiting moment of resistance M_R

In the definition of η, omit the term l_w / l_e in the expressions for both Figure 11a) and Figure 11b). Delete the definitions of l_w and l_e .

*Add new **Annex H**:*

Annex H (normative)

Derivation of nominal yield stress for assessment

H.1 General

The following methods may be used to derive values of the nominal yield stress, σ_y, for use in the assessment of existing bridges. Although written in terms of yield stress some methods may also be used to assess ultimate tensile stress.

H.2 Yield stress based on specifications

In the assessment of existing bridges the nominal yield stress for steels specified to comply with IS EN 10025 or BS 4360 shall be taken as the values defined in **6.2**. For steels to BS 15, BS 548, BS 968 or BS 2762 and thickness up to 63mm the nominal yield stress may be taken as the minimum value specified in the relevant Standard for material appropriate to the thickness of 16mm irrespective of the actual thickness of the component. The issue of the Standard referred to should be that current at the date of fabrication. When the material quality specified is not known and no test information is obtained the steel may be assumed to be a mild steel grade with specified minimum yield stress in BS 15 or BS 4360 appropriate to the date of construction provided that the steel can be identified, by means of trade marks or names, as being made by a recognised supplier.

H.3 Yield stress based on tests of the material in the component to be assessed

If a tensile test in accordance with BS 4360 is undertaken on a sample taken from a particular component to be assessed at the location within its cross section defined in BS 4360 the nominal yield stress of that component may be taken as the measured value.

H.4 Yield stress based on mill test certificates or tests on samples

H.4.1 Yield stress based on mill test certificates or tests on samples taken from existing structures composed of BS EN 10025, BS 4360, BS 15, BS 548, BS 968 or BS 2762 steel

When in assessment mill test certificates for the material used are available or tests are undertaken on the materials for representative parts the yield stresses derived from these may be used to derive the nominal yield stress as follows, provided that the materials were specified to one of the above Standards.

(a) If mill test certificates are available which can be identified as applying to the cast number and product type of the component being assessed but not necessarily to a particular batch from which the component was rolled, or the results of tests in accordance with BS 4360 on samples taken from components of the same profile and the same structure as the part to be assessed are obtained, the nominal yield stress of that component may be taken as the greatest of:

(i) σ_y = the value derived from **H.2** above

(ii) $\sigma_y = \sigma_{ym}\left(1 - 0.128\left(\frac{n+1}{n}\right)^{0.5}\right)$

where

σ_{ym} is the mean of the yield stresses on the relevant certificates or obtained from the tests;

n is the number of relevant certificates or test results.

(iii)

$$\sigma_y = \frac{\sigma_{ym} - 1.2ks*}{0.93 + 17.4\left(\frac{s*}{\sigma_{ym}}\right)^2}$$

where σ_{ym} is as defined in **h.4.1(a)** above

s* is the standard deviation from σ_{ym} of the relevant test results

k is a statistical coefficient values of which are given in Table H.4A for various numbers, n, of relevant test results

If a mill test certificate is available which can be identified as applying to the particular batch of material from one cast or a 40 tonne part of cast from which component being assessed was rolled, or the result a test on a sample taken from the component is obtained the nominal yield stress may be taken as:

$\sigma_y = \sigma_{yt} - 10$ N/mm^2

where σ_{yt}, is the yield stress given on the certificate or obtained from the test in N/mm^2

n	**2***	**3***	**4***	**5**	**6**	**7**	**8**	**9**	**10**	**11**
k	257	66	5.14	4.2	3.71	3.40	3.19	3.03	2.91	2.82

n	**12**	**13**	**14**	**15**	**16**	**17**	**18**	**19**	**20**	**21**
k	2.74	2.67	2.61	2.57	2.52	2.49	2.45	2.42	2.40	2.37

n	**22**	**23**	**24**	**25**	**26**	**27**	**28**	**29**	**30**
k	2.35	2.33	2.31	2.29	2.28	2.26	2.24	2.23	2.22

n	**35**	**40**	**45**	**50**	**60**	**70**	**80**	**90**	**100**	∞
k	2.17	2.13	2.09	2.07	2.02	1.99	1.96	1.94	1.93	1.65

Table H.4A: Values of statistical coefficient k

NOTE: * The use of less than five test results is not recommended.

H.4.2 Yield stress in existing structures composed of other or unidentified steels:

When the steel material is not known to comply with BS EN 10025, BS 4360, BS 15, BS 548, BS 968 or BS 2723, tests should be undertaken on samples taken from the components or similar components in the same structure to determine the yield stress and the nominal yield stress should be derived in accordance with **H.4.1 (a) (iii)** above.

H.5 Worst credible yield stress

When none of the methods in **H.2** to **H.4** can be applied, the nominal yield stress may be taken as the worst credible yield stress, being the value judged to be the least that the actual yield stress would have. In this context, the results of hardness testing (see **6.3**) may be used to provide an estimate of the U.T.S. from which the grade of steel may be judged.

Add new ***Annex I***

Annex I (Normative)

Inspections for assessment

I.1 General

Inspections for Assessment should comply with the aims and provisions of NRA BD 21 and with the recommendations given below.

I.2 Criticality ratings

The nature and extent of inspections should be related to:

(a) the prior knowledge of the construction of the bridge, including as-built drawings, construction procedures, dimensional surveys and material property data; and

(b) the criticality of each part of the bridge in relation to its overall and local structural adequacy.

A preliminary inspection should be undertaken to establish the following:

(1) In the absence of drawings or previous dimensional surveys of any part of the whole of a bridge, the layout dimensions and nominal component sizes should be recorded. Details of all accessible connections should be measured and the locations of any inaccessible parts or connections should be noted. Locations of significant visible damage, deterioration or cracking should be recorded.

(2) If design drawings but no as-built drawings or previous dimensional surveys are available, the layout dimensions should be checked against the design drawings and nominal component sizes used should be verified. Connections should be visually inspected for compliance with the drawings and any variation in location or arrangement noted. Locations of significant damage, deterioration or cracking should be recorded.

(3) For bridges in which the load effects are sensitive to errors in level inclination or common planarity of bearings and for which no as built records of these are available the bearings should be surveyed and the errors recorded.

(4) If as-built drawings and/or previous surveys are available no preliminary inspection is needed.

Following any preliminary inspection an initial assessment of the adequacy of the structure should be undertaken using the best information then available. This should be used to establish the relative criticality of each part and to identify what further information is required to enable the final assessment to be undertaken. At this stage pessimistic assumptions should be made with respect to any relevant parameters for which information is lacking (e.g. material properties, or constructional imperfections). Those parts shown as likely to be inadequate should be identified on drawings to be used for reference in a detailed inspection. They should include parts shown by the preliminary inspection to be significantly corroded or deteriorated.

I.3 Detailed inspections

The detailed inspection of a bridge should supplement the information concerning the details and conditions obtained in the preliminary survey as set out in **I.4** to **I.6**.

I.4 Structural arrangements and sizes

The section dimensions of components at critical locations should be measured. Dimensions of connections and their connectors should be recorded, including weld sizes.

I.5 Constructional imperfections

All components should be visually inspected for gross deformations from intended flatness or straightness. Additionally for all critical parts, the strengths of which are related to geometric imperfections, detailed measurement of deviations should be made in accordance with 5.6 of BS 5400-6 or as otherwise defined in the assessment addenda to BS 5400-3.

The alignments of all bearings in relation to load bearing stiffeners and/or diaphragms should be measured. The coincident ambient temperature of the main bridge members should be recorded and appropriate adjustment made to the eccentricities or alignment to allow for the differences between the observed and the effective bridge temperature relative to the assessments required.

I.6 Condition

At all locations where corrosion, deterioration or damage is apparent, its significance should be assessed by reference to the criticality ratings and where appropriate detailed measurements should be made of loss of section and/or investigations should be undertaken of potential influences on fatigue life or fracture propensity.

Connections in critical regions should be subjected to detailed inspection. Paint should be removed from welds and the welds subjected to 100% magnetic particle inspection (MPI). For fatigue critical connections the welds should be also subjected to full ultrasonic examination. All bolted and riveted connections should be inspected for loss or looseness of connectors. Friction grip bolted connections should be tested for tightness by application of the appropriate torque to a representative sample of nuts.

I.7 Material properties

Where there is inadequate information concerning material properties for critical parts, samples should be taken for mechanical testing. To make use of results of such tests in accordance with Section 6, the samples should be taken in the same structure and considered to be likely to have been supplied from the same batch of material. Where possible such samples should be taken from a position on a member remote from its critical region. The locations of the samples within a section should be relevant to the strength criteria being used (e.g. within a flange of a beam when considering bending capacity) and in accordance with BS 4360.

Test specimens and tensile testing should be accordance with BS 4360. Strain rates in testing should be similar to those used in mill testing. In taking samples great care shall be exercised to avoid the introduction of unacceptable stress concentrations in the structure and the modifications of the properties of the samples due to any heat input.

Add new ***Annex J***

Annex J (informative)

Determination of effective stiffener section for stiffened compression flanges

When in accordance with **9.10.2.3** measured imperfections are to be used in assessing the strength of longitudinal flange stiffeners, the effective imperfection |DSx|eff may be derived as follows:

Figure J.1 represents stiffened panels (r-1), r and (r+1) each having longitudinal stiffeners 1....n....N

In each panel the imperfection DSx should be measured in accordance with BS 5400-6, taking account of the sign (+ve when the bowing is in the direction away from the stiffener outstand).

The mean of the stiffener imperfections in panel r is given by:

$$\overline{\Delta_{sx(r)}} = \Sigma_{n=i}^{N} \frac{1}{N} (\Delta_{sx})_{max(r,n)}$$

Likewise determine $\Delta_{Sx(r-1)}$ and $\Delta_{Sx(r+1)}$

Then for an intermediate panel

$$|\Delta_{Sx}|_{eff(r)} = -1/6\ \Delta_{Sx(r-1)} + 2/3\ \Delta_{Sx(r)} - 1/6\ \Delta_{Sx(r+1)}$$

For an end panel, r, where r=1

$$|\Delta_{Sx}|_{eff(r)} = 5/6\ \Delta_{Sx(1)} - 1/6\ \Delta_{Sx(2)}$$

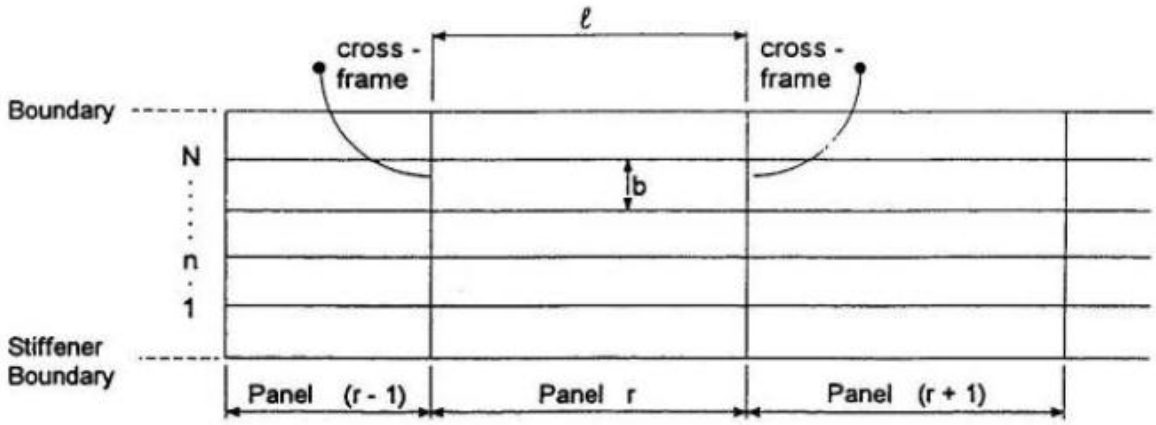

Figure J.1

*Add new **Annex K***

Annex K (Informative)

Assessment of crossbeams in compression flanges

K.1 General

This Annex gives guidance on the methods that may be adopted for the assessment of cross beams in compression flanges that do not comply with the requirements of **9.15.3** and **9.15.5**. The guidance given supplements that given in **9.15.6**. For cases where the initial assessment for stiffness to **9.15.3** shows the cross beam to be inadequate and where overall buckling mode is being utilised, due consideration should be given to the half wavelength of buckling in relation to the distance between supporting cross frames (or diaphragms) providing constraint against buckling. This distance should be an exact multiple of the half wavelength of buckling, and if needed two checks may be required with the half wavelength taken as the nearest values providing exact multiple wavelengths.

Although consideration of the overall buckling mode may save on strengthening in cases of insufficient stiffness, the benefit obtained will depend on the relative stiffness of the deck and cross beams, as well as stress levels. Hence due account of the assessment loading and strengthening provisions for other requirements should be allowed for.

K.2 Derivation of critical stress for girders of insufficient stiffness

The critical stress, σ_{cr} (or load P_{cr}) should be calculated from **K.2.1** (or **K.2.2** as appropriate), with both methods giving similar results for half wavelength of buckling, li, greater than 2. **K.2.1** should always be used in preference, where possible. Where neither can be used, then the general method of **K.2.3** may be used.

K.2.1 General method for symmetrical arrangements with or without edge stiffening

The following method may be used to determine the critical stress, σ_{cr} for the overall buckling of flanges for symmetrical arrangements of main girder webs and cross-girders. The method applies to cross-girders of section variable along their length but of equal spacing, a.

A single cross-girder alone must first be analysed under the system of point loads shown in Figure K.2.1A to determine the vertical deflections at the load points, δ_1 ... δ_n; P_1 ... P_n are the average in-plane direct forces per unit width in the deck over the individual portions beyond and between webs under U.L.S. factored loading. A_E is the sectional area of any edge stiffening element, AE is the area of section of deck per unit width including any longitudinal stiffeners and N is any convenient number to suit calculations. For composite steel/concrete decks the equivalent steel areas must be used. The deflections must be calculated taking account of any variation in crossgirder section and assuming effective flange widths in accordance with **9.15.2**.

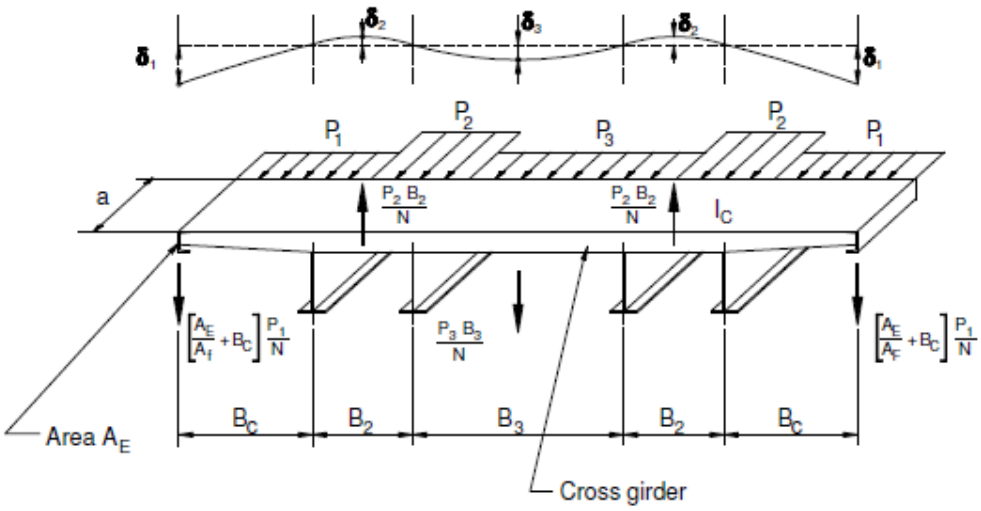

Figure K.2.1A

The following flexibility parameters are to be determined:

$$f_1 = \frac{\delta_1 E I_{bc} N}{P_2 B_c^4}, f_2 = \frac{\delta_2 E I_{be2} N}{P_2 B_2^4}, f_3 = \frac{\delta_3 E I_{be3} N}{P_2 B_3^4}$$

where I_{bc}, I_{be1}, I_{be2} are the average second moment of area of each part of the effective transverse member between main beam webs, as defined in **9.15.3.2**.

The half-wavelength of buckling of the flange can be taken as:

$$l_i = \pi B \left(\frac{I_f a K_2}{2 I_{be} K_1} \right)^{1/4}$$

where B and I_{be} are taken as relevant to portion 2 or 3 as appropriate to section being assessed.

The critical values of the flange forces for buckling are then:

a) When $l_i > 2a$:

$$\sigma_{cr} = \frac{2.82E}{B^2 A_f} \sqrt{\frac{I_f I_{be} K_1 K_2}{K_3^2 a}}$$

b) When $l_i \leq 2a$:

$$\sigma_{cr} = \frac{4 E I_{be} a}{\pi^2 K_3 B^4 A_f} \left\{ K_1 + \frac{\pi^4 I_f B^4 K_2}{4 a^3 I_{be}} \right\}$$

$$\text{Or } \frac{4 E I_{be} a}{\pi^2 K_3 B^4 A_f} \left\{ 2K_1 + \frac{\pi^4 I_f B^4 K_2}{16 I_{be} a^3} \right\}$$

whichever is the lesser

where I_f = Second moment of area of flange per unit width about its centroidal axis, as defined in **9.15.3.2**.

For two webs with or without projecting cantilevers:

$$K_1 = 2\left(1 + \frac{A_E}{B_c A_f}\right) \frac{P_1}{P_2} f_1 \lambda_B^5 + f_2$$

$$K_2 = \frac{4}{3}\left(1 + \frac{3I_E}{B_c I_f}\right) f_1^2 \lambda_B^9 + f_2^2$$

$$K_3 = \frac{4}{3}\left(1 + \frac{3A_E}{B_c I_f}\right) \frac{P_1}{P_2} f_1^2 \lambda_B^9 + f_2^2$$

For four webs with or without projecting cantilevers:

$$K_1 = 2\left(1 + \frac{A_E}{B_c A_f}\right) \frac{P_1}{P_2} f_1 \lambda_B^5 + 2f_2 + \mu_b^5 f_3 \frac{P_3}{P_2}$$

$$K_2 = \frac{4}{3}\left(1 + \frac{3I_E}{B_c I_f}\right) f_1^2 \lambda_B^9 + 2f_2^{\,2} + \mu_b^9 f_3^2$$

$$K_3 = \frac{4}{3}\left(1 + \frac{3A_E}{B_c A_f}\right) f_1^2 \frac{P_1}{P_2} \lambda_B^9 + 2f_2^2 + \mu_b^9 f_3^2 \frac{P_3}{P_2}$$

where $\lambda_B = \frac{B_c}{B_2}$ $\mu_B = \frac{B_3}{B_2}$

I_{be}, I_f, A_f, a, I_{bc} are all as defined in **9.15.3.2**,

B_c, B_2, B_3, P_1, P_2, P_3, δ_1, δ_2, δ_3 are all as shown in Figure K.2.1A.

I_E= Second moment of area of an edge stiffening member,

A_E= Area of cross-section of an edge stiffening member.

K.2.2 Alternative simplified method for cross-girders of uniform section and no edge stiffening

As an alternative to the method in **K.2.1** the more simplified method below may be used to obtain σ_{cr} provided the deck cross-girders are of uniform cross-section, the deck is without edge stiffening, and the double or multiweb systems are subject to uniformly distributed direct stress across the whole width of the deck. For systems with substantial longitudinal edge members design to act as stiffening, the method in **K.2.1** should be used, or for unsymmetrical arrangements or unequally spaced cross-girders, the method in **K.2.3** should be used.

$$\sigma_{cr} = \frac{4E}{B^2 A_f}\sqrt{\frac{I_f I_{be} K}{a}}$$

where

B is taken as B or B^1 as appropriate to section being assessed;

A_f, I_f, I_{be}, a, B_c are all as defined in **9.15.3.2**;

K= Buckling coefficient obtained from Figures K.2.2(A), K.2.2(B) and K.2.2(C), as appropriate.

K.2.3 General method for cases not complying with K.2.1 or K.2.2

The critical stress, σ_{cr}, may be obtained by Southwell plot method or other methods of analyses in accordance with the provisions of **9.15.6**, see ref 9.15.4.

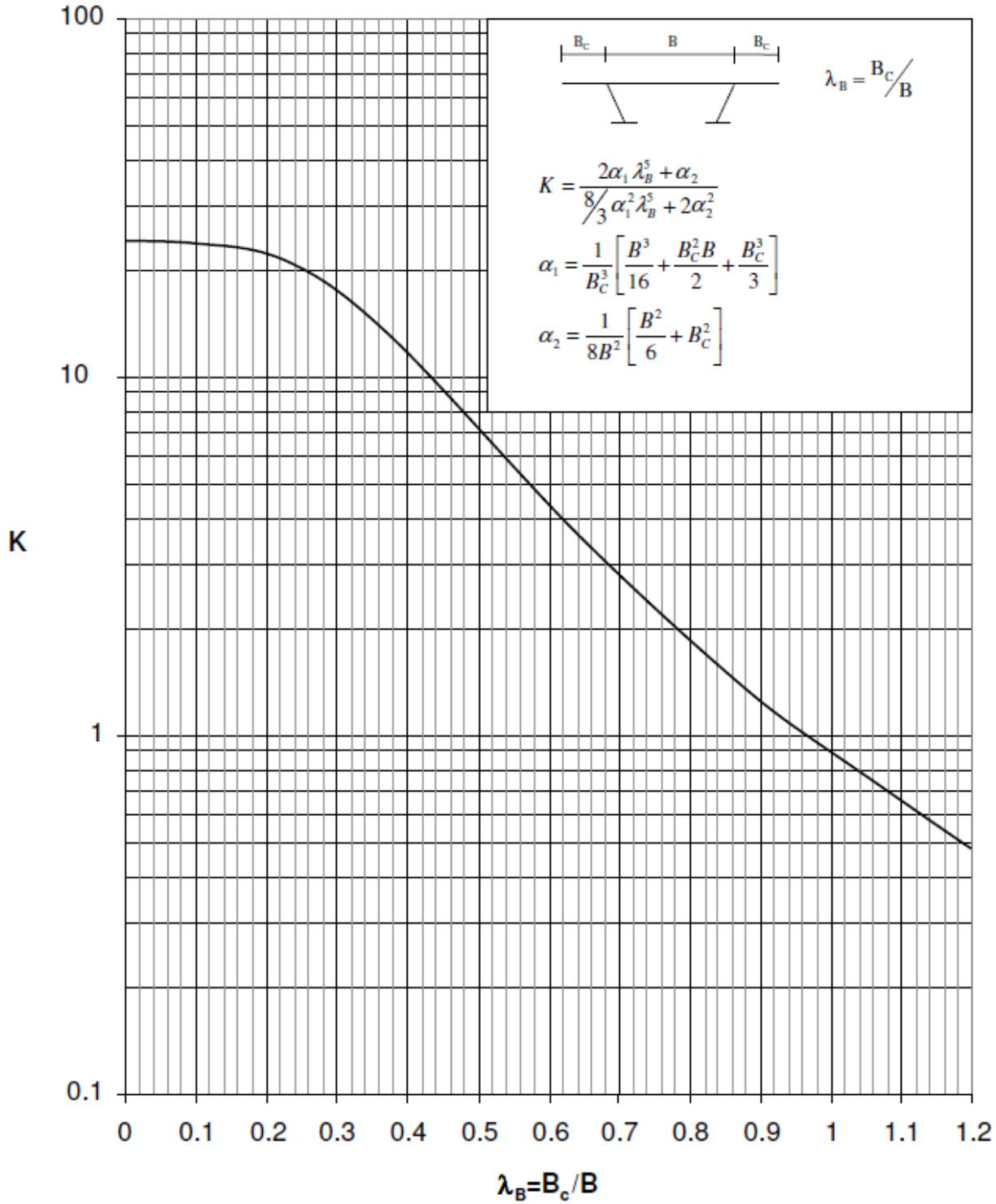

Figure K.2.2(A): Cross-frames without edge stiffening – two webs

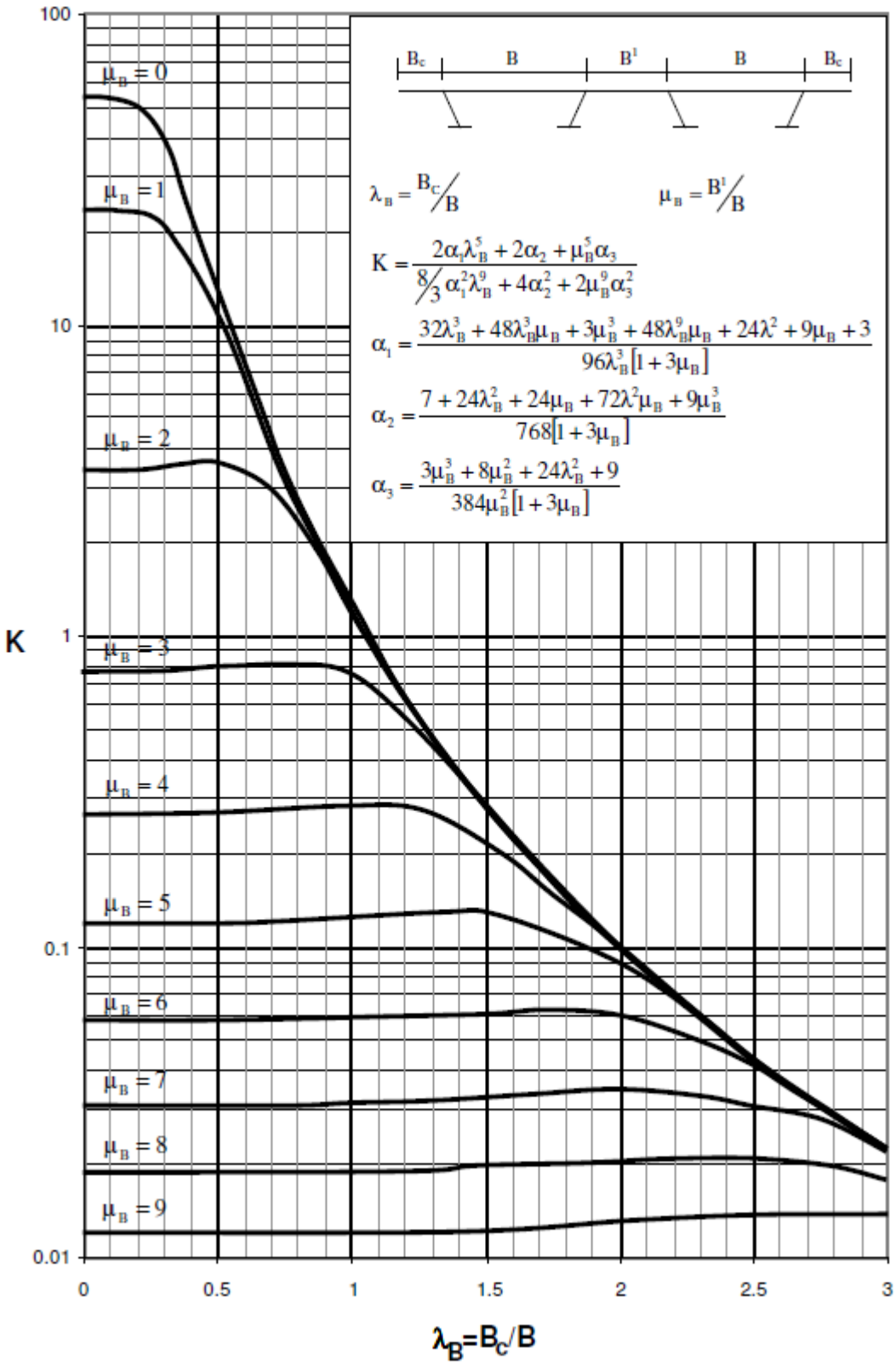

Figure K.2.2(B): Cross-frames without edge stiffening – four webs

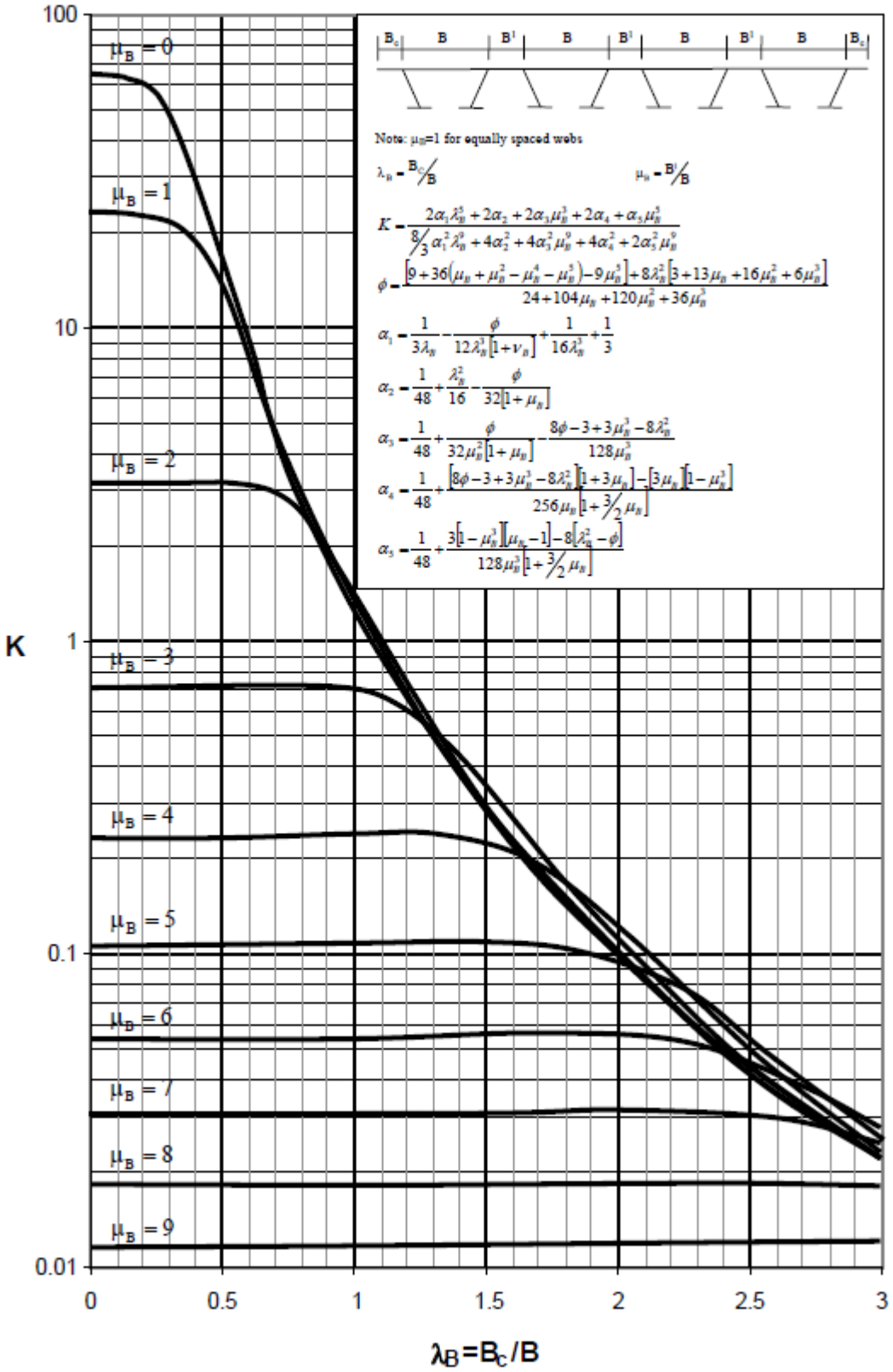

Figure K.2.2(C): Cross-frames without edge stiffening – multiple webs

K.3 Magnification and destabilising factors – general

The stresses in the cross girder to be magnified are mainly those due to non-UDL along the length of the deck, as denoted by the destabilising factor, i_2, in **9.15.4.5.4**.

Typically, therefore, the magnification factor need only be applied to the abnormal vehicle loading (minus an allowance for replaced HA loading, if required) or a short length of HA patch loading i.e. the reduced destabilising factor, i_1, applies where cross-girders deflect equally.

This non-UDL loading may be considerable reduction on the total loading (⅓ to ⅔ may typically occur for long span dual carriageway bridges), leading to a considerable reduction in the magnification of cross-girder stresses when the magnification factor is high (i.e. when the longitudinal stress in the deck is greater than ¼ critical).

K.4 Effect of shear lag stress distribution

It may be possible to also allow for the effect of the shear lag distribution of the in-plane stresses, although this should not strictly be allowed for under ultimate Limit State conditions. However, if it is acceptable to allow for this, (i.e. when the structure is capable of carrying the modified distribution of stresses at the Ultimate Limit State) the most exact way to modify the magnification would be to allow for the distribution of stress in the calculation of the critical stress, and this should be done if the facilities or information are available. Since this will generally be unavailable for the typical design requirements, the methods given in **K.5**, **K.6** or **K.7** may be used.

K.5 Modification to allow for items K.3 and K.4 when using clauses K.2.1 or K.2.2 in cases of insufficient stiffness

The procedure is to calculate σ_{esl}, an equivalent uniform distributed stress in place of the shear lag distributed stress, such that the normally calculated σ_{cr} can still be used.

The destabilising factor, i_2, should then be taken as:

$$\left(\frac{\sigma_{cr}}{\sigma_{cr}-\sigma_{esl}}\right)\left(1-\frac{\rho_k\sigma_{esl}}{\sigma_{cr}-\sigma_{esl}}\right)$$

The destabilising factor, i_1, should be taken as:

$$1+\frac{li}{L_F}\left(\frac{\sigma_{esl}}{\sigma_{cr}-\sigma_{esl}}\right)$$

where

σ_{cr} = Critical stress for overall buckling under uniform in-plane stress

σ_{esl} = Equivalent uniform compressive deck stress
= $\sigma_a + \sigma_b\,(4/3 - 1/3\psi)$

ψ = shear lag factor in flange

σ_a = axial (non SL) stress in flange

σ_b = bending stress in flange, = $\sigma_f - \sigma_a$

ρ_k = proportion of loading producing equal (uniform) cross-girder deflection to total loading, ie the load effects in **9.15.4.5.1** as a proportion of the total load effects.

NB σ_{esl} should not be taken as less than:

$$\frac{\sigma_a + \sigma_b}{3}$$

K.6 Modification to allow for items K.3 and K.4, when cross girders have sufficient stiffness

Where the cross girder has sufficient stiffness but insufficient strength when assessed initially to **9.15.1** to **9.15.5**, methods of overall flange buckling are not relevant. In these cases the cross-frame has to be strengthened to meet the loads developed when overall buckling of the flange is prevented. When considering modified load cases or after strengthening has been added, the overall flange buckling mode may still have to be examined since load effects to be considered (**9.15.4**) and the stiffness parameters (**9.15.3**) may change from the initial assessment.

Where the cross-girder has sufficient stiffness to ensure overall flange buckling cannot occur for all load cases considered, modified loadings for strength can be derived as follows in cases of significant shear lag. This can only be applied at S.L.S. unless separate checks show the structure capable of carrying the shear lag distribution of stresses at U.L.S.

(1) a reduced I_{ber} is derived to replace $I_{be\ min}$ using σ_{fr} in place of σ_f in **9.15.3.2**, thus

$$\sigma_{fr} = \sigma_f - \frac{\sigma_b}{3}\left(\frac{1}{\psi} - 1\right)$$

but with a minimum value of $\sigma_{fr} = \sigma_f/3$

where

σ_b is stress due to bending (i.e. $\sigma_b = \sigma_f$ in pure bending cases) and
ψ is the shear lag factor but with a minimum value of $\sigma_{fr} = \sigma_f/3$;

(2) a reduced destabilising factor, i_{2r}, is derived to replace i_2 in **9.15.4.5.4**, thus

$$i_{2r} = \frac{3\sqrt{I_{be}}}{3\sqrt{I_{be}} - \sqrt{I_{ber}}}\left\{1 - \frac{\rho_k}{3\sqrt{\frac{I_{be}}{I_{ber}} - 1}}\right\}$$

(3) i_1 may be left unchanged or may be reduced to

$$i_{1r} = 1 + l_i / L_F \frac{3\sqrt{I_{ber}}}{3\sqrt{I_{be}} - \sqrt{I_{ber}}}$$

where

I_{be}, I_{bemin}, i_1, i_2, l_i, L_f are all as defined in 9.15.4.5.4.
ρ_k is as defined in **K.5**.

K.7 Derivation of destabilising factors when using

K.2.3 or other general methods

(1) When using **K.2.3** (i.e. Southwell or any other method of deriving the critical stress σ cr), the destabilizing factor i_2 should be taken as:

$$i_2 = \frac{\sigma_{cr}}{\sigma_{cr} - \sigma_f}$$

Similarly i_1 should be taken as:

$$i_1 = 1 + \frac{l_i}{L_F}\left(\frac{\sigma_f}{\sigma_{cr} - \sigma_f}\right)$$

where i_1, i_2, l_i, L_f, σ_{cr}, σ_f are all as defined in **9.15.4.5.4**.

(2) Further to the above, where advantage can be taken of the shear leg distribution, i_{2r} may be further reduced to

$$\left(\frac{\sigma_{cr}}{\sigma_{cr} - \sigma_f}\right)\left(1 - \frac{\rho_k \sigma_{fr}}{\sigma_{cr} - \sigma_f}\right)$$

where σ_{fr} and σ_b are as defined in **K.6**, and ρ_k is as defined in **K.5**.

(3) When using a full non-linear analysis which includes stress distribution of all collapse factored loads and takes account of all destabilising magnifications, then $i_2 = i_1 = 1.0$

K.8 Measured imperfections

The assessment imperfection (Δ_{co}) to be used should be based on measured imperfections or design tolerance (Δ_{cx}). This needs to take account of the buckling mode, as shown in Figure K.8A.

in which

a is the cross-frame spacing (or average of adjacent spacing where these vary). In the case of one cross-frame between diaphragms a is half the diaphragm spacing.

l_i is the buckling wavelength.

γ_A is the factor to be applied to Δ_{cx} to allow for statistical assessment or factor on tolerance, to be

taken as 1.2 unless derived otherwise.

CASE 1: $l_i = a : \Delta_{co} = ½\, \gamma_A\, \Delta_{cx}$

CASE 2: $l_i = 2a : \Delta_{co} = \gamma_A\, \Delta_{cx}$

CASE 3: $l_i = 3a : \Delta_{co} = 2\, \gamma_A\, \Delta_{cx}$
$l_i = 4a : \Delta_{co} = 3.4\, \gamma_A\, \Delta_{cx}$
$l_i = 5a : \Delta_{co} = 5.2\, \gamma_A\, \Delta_{cx}$

or in general:

$$l_i = na : \Delta_{co} = \frac{\Delta_{cx}\gamma_A}{1 - \sin\left\{\frac{(n-2)\pi}{2n}\right\}}$$

In lieu of any other information, the Code values of Δ_{co} should be adopted, which cater particularly for case 2, with $\gamma_A = 1.2$, and $\Delta_{cx} = 2a/500$, ie $\Delta_{co} = a/208$.

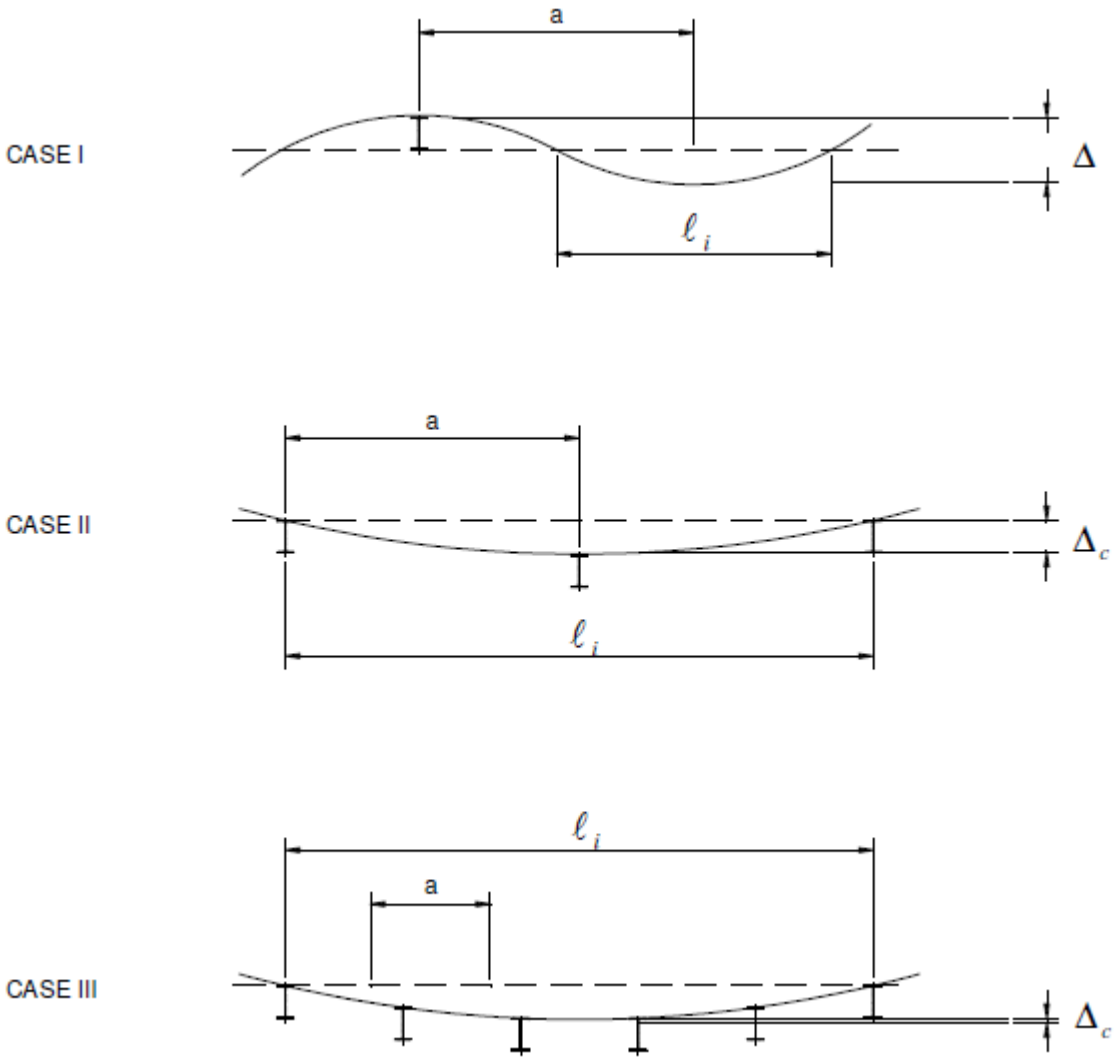

Figure K.8A

Add new ***Annex L***

Annex L (Informative)

Assessment of stiffened diaphragms not complying with limitations

L.1 General

The adequacy of stiffened diaphragms not complying with the limitations in **9.17.2** may be assessed in accordance with this Annex. Where the limitations on shape of stiffeners do not comply, then the yield stress to be used in assessment of the strengths of diaphragm stiffeners in .**L.5** must be derived with due regard to the stiffener shape in accordance with **9.3.1** and **9.3.4** with b taken as the spacing of stiffeners, or the distance between the stiffener and the box wall, as appropriate. For boxes with sloping walls, the distance between the stiffener and the box wall should be taken at the centre of the length of the stiffener between points of effective restraint.

L.2 Loading on diaphragms

L.2.1 Derivations

The load effects in diaphragms and associated parts of box girders should be derived from global analysis undertaken in accordance with **9.4.1**. The structure should be analysed by an elastic finite element method with all its primary components, including each box web and support diaphragms, so modelled as to enable the global forces transmitted to the boundaries of the diaphragms and their distribution to be determined. Analysis to determine load effects from local loads and reactions, including distortional effects, should be undertaken using a finite element method on a model of sufficient extent to ensure that the effects calculated are insensitive to assumed end conditions. The model should include any cross beams and cantilevers integral with the diaphragm.

L.2.2 Effects to be considered

The effects to be considered are as defined in **9.17.3.2**.

L.2.3 Effective sections

For determining stresses in a diaphragm the effective sections to be assumed should be derived in accordance with **9.17.4.2.2**, **9.17.4.2.3(b)** and **(c)**, **9.17.4.4(a)** and **9.17.4.5**.

L.3 Stresses in diaphragms

L.3.1 General

L.3.1.1 Analysis

Stresses in diaphragms should be calculated by finite element analysis of a model having the effective sections defined in **L.2.3**. The model should include the support bearings and their supporting structure when this is not effectively rigid. A three dimensional model is required when a diaphragm is not in a single plane and/or the diaphragm is subject to out-of-plane loading.

Any openings not complying with the limits in **9.17.2.8** should be modelled. Alternatively plate panels with large openings framed by stiffeners may be ignored in analysis and strength assessments.

L.3.1.2 Effective stresses

Effective values of stresses to be used in assessment of the buckling strength of plate panels should be derived in accordance with **L.9.1**. The effective values of stiffener stresses to be used in buckling strength checks should be derived in accordance with **L.9.2**.

L.3.2 Stresses in diaphragm plates

L.3.2.1 Vertical stresses

Vertical stresses, σ_{d1}, should be taken as the values derived in accordance with **L.3.1.1** for yield checks and **L.3.1.2** for buckling checks.

L.3.2.2 Horizontal stresses

The horizontal stresses, σ_{d2}, should be taken as the values derived in accordance with **L.3.1.1** for yield checks. The effective stresses for buckling checks should be derived in accordance with **L.3.1.2** with σ_{2b} taken as the effective horizontal bending stress and σ_{2q} as the effective horizontal mean stress, and $\sigma_{d2} = \sigma_{2b} + \sigma_{2q}$ in the panel under consideration.

L.3.2.3 Shear stresses

The shear stresses, τ, for yield checks should be derived in accordance with **L.3.1.1**.

L.3.3 Stresses in diaphragm stiffeners

L.3.3.1 Vertical stresses in bearing stiffeners

The vertical stress, $\sigma_{1S} + \sigma_{1ST}$, in a bearing stiffener should be taken as the maximum value derived in accordance with **L.3.1.1**.

L.3.3.2 Bending stresses in bearing stiffeners

The bending stress, $\sigma_{bs\ 1}$, in a bearing stiffener should be derived in accordance with **9.17.6.3.3**. Where the groups of bearing stiffeners are not symmetrically placed about the diaphragm the effect of eccentricity must be included in M_s in **9.17.6.3.3**.

L.3.3.3 Equivalent stress for buckling check

The equivalent axial stress, σ_{se}, referred to in **9.17.6.3.4** should be calculated in accordance with the equation in that clause with the following modifications:

(1) For bearing stiffeners: σa should be taken as the maximum value of $\sigma_{1S} + \sigma_{1ST}$ derived in accordance with **L.3.3.1**. σ_{d2} is the effective value derived from **L.3.2.2** over the height of the stiffener. τ is the average shear stress in the panels on each side of the stiffener derived from **L.3.2.3** over the length of the stiffener, σ_{2S} is the average value of σd2 within the middle third of the length l_s, where l_s is as defined in **9.17.6.3.4**.

(2) For intermediate stiffeners:

(a) *Horizontal stiffeners*: σ_{d2} is the effective value derived in accordance with **L.3.2.2**, and τ is the average shear stress in the panels on each side of the stiffener, both over the unrestrained length of the stiffener.

(b) *Vertical stiffeners*: σ_a is the effective value of $\sigma_{1S} + \sigma_{1ST}$ over the unrestrained height of the stiffeners derived from **L.3.3.1**. τ is the average shear stress in the panels on each side of the stiffener over its unrestrained height, derived from **L.3.1**. σ_q is in accordance with the equation in **9.17.6.3.4** with σ_{2S} equal to the effective value of σ_{d2}, and s_{2bmax} and σ_{2bmin} equal to the maximum and minimum values of σ_{2b} derived in accordance with **L.3.2.2**.

(3) Allowance for actual imperfections where appropriate in accordance with **L.8**.

L.4 Strength of diaphragm plate

L.4.1 Yielding of diaphragm plate

Plate panels should be checked in accordance with **9.17.6.4** using stresses derived in accordance with **L.3.1**. Stress concentrations within a distance $12t_d$ from a corner of any opening may be ignored, where td is the diaphragm plate thickness.

L.4.2 Buckling of diaphragm plate

Plate panels not satisfying any of the requirements of **9.17.6.5.1** should be checked in accordance with **9.17.6.5.2** using the effective panel stresses calculated in accordance with **L.3.2** and the qualifications given therein. In using the buckling criterion in **9.11.4** σ_1 and σ_2 should be derived from **L.9.1**. The buckling strength of plate panels containing openings in excess of the limits given in **9.17.2.8(a)** must be subject to special investigation.

L.5 Strength of diaphragm stiffeners

L.5.1 Yielding of diaphragm stiffeners

Bearing stiffeners should be checked in accordance with **9.17.6.6** using the stresses defined in **L.3.3.1** and **L.3.3.2**.

L.5.2 Buckling of diaphragm stiffeners

All stiffeners should be checked in accordance with **9.17.6.7** using the equivalent stresses for buckling check as defined in **L.3.3.3**, and allowance for actual imperfections where appropriate in accordance with **L.7**.

L.5.3 Yield stress for non-complying diaphragm stiffeners

The nominal yield stress, σ_{ys}, used in **L.5.1** or **L.5.2** should be derived in accordance with **L.1** in the case of noncomplying stiffener shapes.

L.6 Diaphragm/web junctions

Diaphragm/web junctions should be checked in accordance with **9.17.7**.

L.7 Diaphragm stiffener imperfections for use in buckling check

In the buckling check in **L.5.2** the stiffener imperfection must be used to modify σ_{ls} as follows.

Where the out-of-straightness of the stiffener exceeds the tolerance in BS 5400-6, σ_{ls} must be calculated, making allowance for the actual imperfection, by use of formula (1) given in **Annex G13**, with η as given for assessment in **9.11.5.2**.

Where the out-of-straightness of the stiffener is less than the tolerance in BS 5400-6, the value of σ_{ls} may be calculated making allowance for the actual imperfection, by use of formula (1) given in **Annex G13**, with η as given for assessment in **9.11.5.2**.

In applying formula (1) of **Annex G13**, L must be taken as l_s as defined in **9.17.6.3.4**.

L.8 Diaphragm stiffener imperfections for deriving equivalent stress

When calculating σ_{se} in **L.3.3.3** the stiffener imperfection must be used to modify k_s as follows.

Where the out-of-straightness of the stiffener exceeds the tolerance in BS 5400-6, k_s must be calculated, making allowance for the actual imperfection, by use of formula (2) given in **Annex G13**, with η as given for assessment in **9.11.5.2**.

Where the out-of-straightness of the stiffener is less than the tolerance in BS 5400-6, the value of k_s may be calculated making allowance for the actual imperfection, by use of formula (2) given in **Annex G13**, with η as given for assessment in **9.11.5.2**.

In applying formula (2) of **Annex G13**, L must be taken as l_s as defined in 9.17.6.3.4.

L.9 Derivation of effective stresses in plate panels and stiffeners

L.9.1 Effective values of stresses varying in a complex manner in plate panels

Where rectangular plate panels are subject to complex stress systems the following method may be used to determine effective stresses.

Each panel is considered to be composed of rectangular elements of uniform size, forming an array of p elements over the dimension a and q elements over dimension b, as shown in Figure L.9.1A.

The mean values of each of the orthogonal stress components, σ1 and σ2, in each of the p x q elements in the panel are to be first determined, and then reduced to the six effective components of overall edge stresses in the whole panel shown in Figure L.9.1A. These six equivalent components consist of:

σ_{m1} = Effective mean of stresses σ_1,

σ_{v1} = Effective linear variation of σ_1 stresses in direction 1 (over half the panel length),

σ_{b1} = Effective linear variation of σ_1 stresses in direction 2 (over half the panel width),

σ_{m2} = Effective mean of stresses σ_2,

σ_{v2} = Effective linear variation of σ_2 stresses in direction 2 (over half the panel width),

σ_{b2} = Effective linear variation of σ_2 stresses in direction 1 (over half the panel length).

These effective stress components are calculated from the stresses in the p x q elements by means of the arrays of coefficients given in Tables L.9A, L.9B and L.9C.

a) To calculate σ_{m1}, using the array in Table L.9A having p columns and q rows, multiply element stresses, σ_1, by the corresponding element coefficients, k_m, and sum.

b) To calculate σ_{b1}, using the array in Table L.9B having p columns and q rows, multiply the element stress values, (σ_1 - σ_{m1}), by the appropriate coefficients, k_b, and sum. The coefficients should be used either as presented in Table L.9B, or reversed top to bottom, to obtain the larger positive value of σ_{v1}.

c) To calculate σ_{v1}, using the array in Table L.9C having p columns and q rows, multiply the element stress values, (σ_1 - σ_{m1}), by the appropriate coefficients, k_v, and sum. Note that the array should be used with larger coefficients to the left or to the right in such a way as to obtain the larger positive value of σ_{v1}.

d) The stresses σ_{m2}, σ_{b2} and σ_{v2} are obtained similarly from the element stresses, σ_2, by turning the stress array through 90°, making the direction of application of the stress coincident with that shown in Tables L.9A to L.9C.

Note that all coefficients are to be applied algebraically, compressive stresses always being regarded as positive.

The effective uniform shear stress is to be taken as:

$$\tau = \frac{a\,(Q_1 + Q_3) - b\,(Q_2 + Q_4)}{4\,abt}$$

where Q_1, Q_2, Q_3 and Q_4 are the boundary shear forces
When the direct stress resultants on opposite edges of a panel are unequal as shown in Figure L.9.1, effective uniform stresses, σ_1 and σ_2, may be calculated as follows:

a) $\sigma_{m1} + \sigma_{v1}$ and $\sigma_{m1} - \sigma_{v1}$ are the longitudinal direct stresses on the two opposite shorter edges.

When σ_{m1} is positive (i.e. compressive):

If $$\frac{\sigma_{vl}}{\sigma_{ml}} \geq \frac{3(\phi - 1)}{\phi}$$

$$\sigma_1 = \sigma_{m1}\left[1 + \frac{1}{3}\left(\frac{\sigma_{vl}}{\sigma_{ml}}\right)^2\right] \text{ or } (\sigma_{m1} + \sigma_v), \quad \textit{whichever is the lesser}$$

If $$\frac{\sigma_{vl}}{\sigma_{ml}} < \frac{3(\phi - 1)}{\phi}$$

$$\sigma_1 = \sigma_{ml}\left[1 + \frac{\phi - 1}{\phi}\left(\frac{\sigma_{vl}}{\sigma_{ml}}\right)\right]$$

when σ_{m1} is negative: $\sigma_1 = \sigma_{m1} + \sigma_{v1}$.

b) $\sigma_{m2} + \sigma_{v2}$ and $\sigma_{m2} - \sigma_{v2}$ are the longitudinal direct stresses in the shorter direction on the two opposite longer edges, and σ_{b2} is the in-plane coexistent pure bending stresses on these two edges.

When σ_{m2} is positive:

If $\phi > 2$,

$$\sigma_2 = \sigma_{m2}\left[1 + \frac{1}{3}\left(\frac{\sigma_{v2}}{\sigma_{m2}}\right)^2\right] + \left(\frac{\phi - 2}{\phi}\right) \sigma_{b2} \text{ or}$$

$$\left[\sigma_{m2} + \sigma_{v2} + \left(\frac{\phi - 2}{\phi}\right)\sigma_{b2}\right] \textit{ whichever is the lesser}$$

If $1 \leq \phi \leq 2$,

$$\sigma_2 = \sigma_{m2}\left[1 + \frac{1}{3}\left(\frac{\sigma_{v2}}{\sigma_{m2}}\right)^2\right] \text{ or } (\sigma_{m2} + \sigma_{v2}) \textit{ whichever}$$

When σ_{m2} is negative:

If $\phi > 2$, $\sigma_2 = \sigma_{m2} + \sigma_{v2} + \left(\frac{\phi - 2}{\phi}\right)\sigma_{b2}$

If $1 \leq \phi \leq 2$, $\sigma_2 = \sigma_{m2} + \sigma_{v2}$ where $\phi = a / b$

L.9.2 Effective values of applied stresses in diaphragm stiffeners

Where stresses vary along the length of a stiffener, its length should be divided into at least four equal segments and the effective value of stress in the stiffener in the direction of the stiffener be taken as $\sigma_{ae} = \Sigma\ (\sigma_s\ k^1_m)$, being the sum of the stress in each segment σ_s multiplied by the corresponding coefficient k^1_m, from the array of influence coefficients given in Table L.9D.

p=5, q=6				
.001	.008	.011	.008	.001
.008	.044	.065	.044	.008
.015	.080	.120	.080	.015
.015	.080	.120	.080	.015
.008	.044	.065	.044	.008
.001	.008	.011	.008	.001

p=4, q=6			
.003	.012	.012	.003
.015	.069	.069	.015
.028	.126	.126	.028
.028	.126	.126	.028
.015	.069	.069	.015
.003	.012	.012.	.003

p=3, q=6		
.006	.018	.006
.033	.103	.033
.060	.188	.060
.060	.188	.060
.033	.103	.033
.006	.018	.006

p=2, q=6	
.015	.015
.084	.084
.154	.154
.154	.154
.084	.064
.015	.015

p=1, q=6
.029
.169
.309
.309
.169
.029

p=5, q=5				
.002	.013	.019	.013	.002
.013	.068	.102	.068	.013
.019	.102	.153	.102	.019
.013	.068	.102	.068	.013
.002	.013	.019	.013	.002

p=4, q=5			
.005	.020	.020	.005
.024	.108	.108	.024
.036	.162	.162	.036
.024	.108	.108	.024
.005	.020	.020	.005

p=3, q=5		
.010	.030	.010
.051	.160	.051
.077	.240	.077
.051	.160	.051
.010	.030	.010

p=2, q=5	
.025	.025
.131	.131
.197	.197
.131	.131
.025	.025

p=1, q=5
.050
.263
.395
.263
.050

p=5, q=4				
.005	.024	.036	.024	.005
.021	.109	.163	.109	.021
.021	.109	.163	.109	.021
.005	.024	.036	.024	.005

p=4, q=4			
.009	.038	.038	.009
.038	.173	.173	.038
.038	.173	.173	.038
.009	.038	.038	.009

p=3, q=4		
.018	.057	.018
.082	.257	.082
.082	.257	.082
.018	.057	.018

p=2, q=4	
.047	.047
.211	.211
.211	.211
.047	.047

p=1, q=4
.094
.422
.422
.094

p=5, q=3				
.010	.053	.080	.053	.010
.031	.166	.249	.166	.031
.010	.053	.080	.053	.010

p=4, q=3			
.019	.084	.084	.019
.058	.263	.263	.058
.019	.084	.084	.019

p=3, q=3		
.040	.126	.040
.126	.391	.126
.040	.126	.040

p=2, q=3	
.103	.103
.321	.321
.103	.103

p=1, q=3
.206
.643
.206

p=5, q=2				
.027	.145	.218	.145	.027
.027	.145	.218	.145	.027

p=4, q=2			
.051	.230	.230	.051
.051	.230	.230	.051

p=3, q=2		
.110	.343	.110
.110	.343	.110

p=2, q=2	
.281	.281
.281	.281

p=1, q=2
.563
.563

p=5, q=1				
.073	.387	.581	.387	.073

p=4, q=1			
.136	.614	.614	.136

p=3, q= 1		
.293	.913	.293

p=2, q=1	
.750	.750

p=1, q=1
1.500

Table L9A: Influence coefficients, k_m for effective mean stress of element array p x q

p=5, q=6				
.021	.112	.158	.112	.021
.053	.280	.421	.280	.053
.017	.090	.135	.090	.017
-.004	-.020	-.029	-.020	-.004
-.002	-.011	-.016	-.011	-.002
.000	-.001	-.002	-.001	-.000

p=4, q=6			
.040	.178	.178	.040
.099	.445	.445	.099
.032	.143	.143	.032
-.007	-.031	-.031	-.007
-.004	-.017	-.017	-.004
.000	-.002	-.002	.000

p=3, q=6		
.085	.265	.085
.213	.662	.213
.068	.213	.068
-.015	-.046	-.015
-.008	-.026	-.008
-.001	-.003	-.001

p=2, q=6	
.217.	.217
.543	.543
.175	.175
-.038	-.038
-.021	.-021
-.002	-.002

p=1, q=6
.435
1.087
.349
-.076
-.042
-.005

p=5, q=5				
.032	.169	.253	.169	.032
.054	.287	.430	.287	.054
.003	.017	.025	.017	.003
-.004	-.019	-.029	-.019	-.004
.000	-.002	-.003	-.002	.000

p=4, q=5			
.059	.268	.268	.059
.101	.455	.455	.101
.006	.026	.026	.006
-.007	-.030	-.030	-.007
-.001	-004	-.004	-.001

p=3, q=5		
.128	.398	.128
.217	.677	.217
.013	.039	.013
-.014	-.045	-.014
-.002	-.005	-.002

p=2, q=5	
.327	.327
.556	.556
.032	.032
-.037	-.037
-.004	-.004

p=1, q=5
.654
1.112
.065
-.074
-.009

p=5, q=4				
.049	.260	.391	.260	.049
.042	.222	.334	.222	.042
-.005	-.027	-.041	-.027	-.005
-.001	-.005	-.007	-.005	-.001

p=4, q=4			
.092	.413	.413	.092
.078	.353	.353	.078
-.010	-.043	-.043	-.010
-.002	-.007	-.007	-.002

p=3, q=4		
.197	.615	.197
.169	.525	.169
-.021	-.064	-.021
-.004	-.011	-.004

p=2, q=4	
.505	.505
.431	.431
-.053	-.053
-.009	-.009

p=1, q=4
1.009
.862
-.105
-.018

p=5, q=3				
.074	.392	.589	.392	.074
.013	.070	.106	.070	.013
-.002	-.012	-.018	-.012	-.002

p=4, q=3			
.138	.623	.623	.138
.025	.112	.112	.025
-.004	-.019	-.019	-.004

p=3, q=3		
.298	.927	.298
.053	.116	.053
-.009	-.029	-.009

p=2, q=3	
.761	.761
.137	.137
-.024	-.024

p=1, q=3
1.522
.273
-.047

p=5, q=2				
.091	.482	.724	.482	.091
-.006	-.032	-.048	-.032	-.006

p=4, q=2			
.170	.766	.766	.170
-.011	-.050	-.050	-.011

p=3, q=2		
.366	1.139	.366
-.024	-.075	-.024

p=2, q=2	
.936	.936
-.062	-.062

p=1, q=2
1.871
-.123

p=5, q=1				
.085	.451	.677	.451	.085

p=4, q=1			
.159	.715	.715	.159

p=3, q=1		
.342	1.064	.342

p=2, q=1	
.874	874

p=1, q=1
1.748

Table L9B: Influence coefficients, k_b for effective in-plane bending stress of element array p x q

p=5, q=6				
.019	.032	.002	.000	.000
.109	.185	.011	-.010	.000
.199	.339	.020	-.020	.000
.000	.000	.000	.000	.000
.109	.185	.011	-.010	.000
.019	-.032	.002	.000	.000

p=4, q=6			
.029	.025	.000	.000
.168	.144	-.020	.000
.307	.262	-.030	-.010
.307	.262	-.030	-.010
.168	.144	-.020	.000
.029	.025	.000	.000

p=3, q=6		
.044	.008	.000
.254	.046	-.010
.463	.083	-.010
.463	.083	-.010
.254	.046	-.010
.044	.008	.000

p=2, q=6	
.054	.000
.312	-.020
.570	-.040
.570	-.040
.312	-.040
.054	.000

p=1, q=6
.050
.291
.532
.532
.291
.050

p=5, q=5				
.032	.054	.003	-.004	.000
.169	.287	.017	-.019	-.002
.253	.430	.025	-.029	-.003
.169	.287	.017	-.019	-.002
.032	.054	.003	-.004	.000

p=4, q=5			
.049	.042	-.005	-.001
.260	.222	-.027	-.005
.391	.334	-.041	-.007
.260	.222	-.027	-.005
.049	.042	-.005	-.001

p=3, q=5		
.074	.013	-.002
.392	.070	-.012
.589	.106	-.018
.392	.070	-.012
.074	.013	-.002

p=2, q=5	
.091	-.006
.482	-.032
.724	-.048
.482	-.032
.091	-.006

p=1, q=5
.085
.451
.677
.451
.085

p=5, q=4				
.059	.101	.006	-.007	-.001
.268	.455	.026	-.030	-.004
.268	.455	.026	-.030	-.004
.059	.101	.006	-.007	-.001

p=4, q=4			
.092	.078	-.010	-.002
.413	.353	-.043	-.007
.413	.353	-.043	-.007
.092	.078	-.010	-.002

p=3, q=4		
.138	.025	-.004
.623	.112	-.019
.623	.112	-.019
.138	.025	-.004

p=2, q=4	
.170	-.011
.766	-.050
.766	-.050
.170	-.011

p=1, q=4
.159
.715
.715
.159

p=5, q=3				
.128	.217	.013	-.014	-.002
.398	.677	.039	-.045	-.005
.128	.217	.013	-.014	-.002

p=4, q=3			
.197	.169	-.021	-.004
.615	.525	-.064	-.011
.197	.169	-.021	-.004

p=3, q=3		
.298	.053	-.009
.927	.116	-.029
.298	.053	-.009

p=2, q=3	
.366	-.024
1.139	-.075
.366	-.024

p=1, q=3
.342
1.064
.342

p=5, q=2				
.327	.556	.032	-.037	-.004
.327	.556	.032	-.037	-.004

p=4, q=2			
.505	.431	-.053	-.009
.505	.431	-.053	-.009

p=3, q=2		
.761	.137	-.024
.761	.137	-.024

p=2, q=2	
.936	-.062
.936	-.062

p=1, q=2
.874
.874

p=5, q=1				
.654	1.112	.065	-.074	-.009

p=4, q=1			
1.009	.862	-.105	-.018

p=3, q= 1		
1.522	.273	-.047

p=2, q=1	
1.871	-.123

p=1, q=1
1.748

Table L9C: Influence coefficients, k_v for effective linearly varying mean stress of element array p x q

Number of equal segments along the length of the stiffener											
1	2	3	4	5	6	7	8	9	10	11	12
1.500	.563	.206	.094	.050	.029	.019	.013	.009	.006	.005	.004
	.563	.643	.422	.263	.169	.113	.079	.057	.042	.032	.025
		.206	.422	.395	.309	.231	.173	.131	.101	.078	.062
			.094	.263	.309	.284	.239	.196	.159	.129	.105
				.050	.169	.231	.239	.221	.195	.167	.142
					.029	.113	.173	.196	.195	.181	.163
						.019	.079	.131	.159	.167	.163
							.013	.057	.101	.129	.142
								.009	.042	.078	.105
									.006	.032	.062
										.005	.025
											.004

$$\sigma_{ae} = \Sigma\left(\sigma_s k'_m\right)$$

Where σ_B = stress in corresponding segment

Table L9D: Influence coefficients, k'_m for determining effective stresses in stiffness

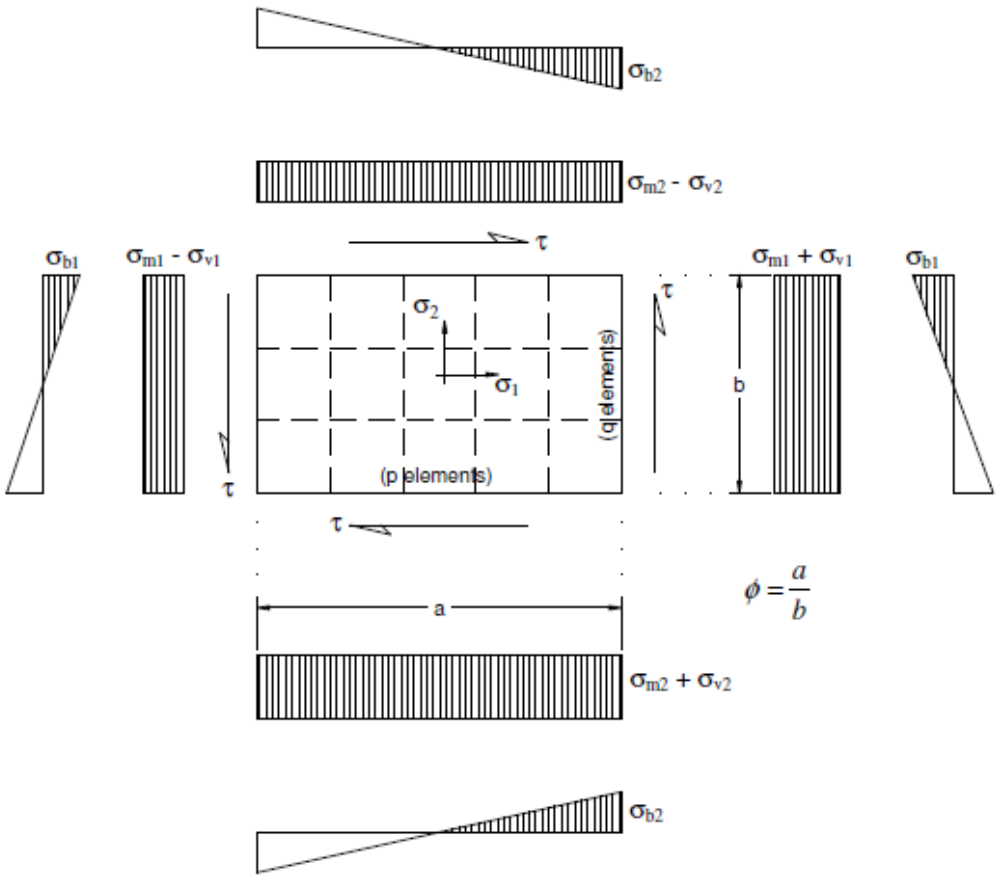

(Compressive stresses are shown hatched)

Figure L9.1A

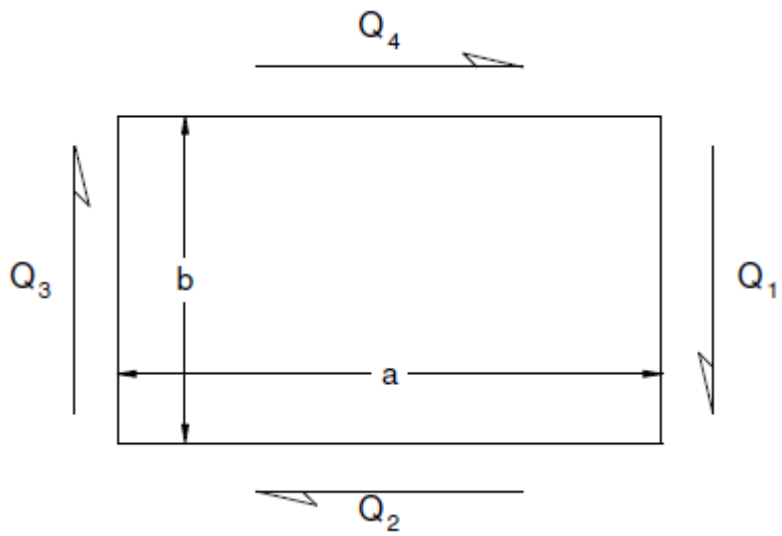

Figure L9.2A

Add new ***Annex M***

Annex M (Informative)

Critical buckling loads for battened members

M.1 General

Provided that the arrangement of battens is in accordance with **10.8.5.1** and that the main members are of the same cross-section, the values of critical buckling loads may be taken as $P^1_{EY} = \varphi_Y P_{EY}$, $P^1_{EX} = \varphi_X P_{EX}$, where φ_Y and φ_X may be derived by an iterative procedure from **M.2** or **M.3** respectively as appropriate.

M.2 Members where the faces parallel to the X-X axis are battened

(a) In general,

$$\phi_Y = \frac{K}{1 + \frac{\pi^2 \alpha A_e r_y^2}{l_y^2}\left\{\frac{l_{b1} c}{12 I_b n} + \frac{\alpha l_{b1}^2}{24 I_n (1-\beta_b)} + \frac{3 l_{b1}}{c A_b n}\right\}}$$

Where

I_n = Second moment of area of a main component or the sum of the second moments of area of main components to one side of the Y-Y axis about its or their centroidal axis parallel to the Y-Y axis (one component where channels are battened, two components where 4 corner angles are battened)

$$\beta b = \frac{\phi_Y P_{EY}}{\frac{2\pi^2 E I_{min}}{a^2 l_{b1}^2}}$$

A_e, n, l_y, l_{b1}, r_y are all as defined in **10.8.3** or **10.8.5**.

A_b = Cross sectional area of a batten plate
I_b = Second moment of area of one batten in its plane about its transverse centre line
c = Distance parallel to the X-X axis between the centroidal axes of the main components
I_{min} = Second moment of area of a main component or the sum of the second moments of area of main components to one side of the Y-Y axis about its or their minor axis
P_{EY} = is as defined in **10.8.5.2**
K = 1, α = 0.85 for welded or friction grip bolted battens
K = 0.7, α = 1 for riveted or black bolted battens

NOTE : In the case where channels or similar are battened, $I_{min} = I_h$; in the case where 4 corner angles or similar are battened, I_{min} is twice the minimum I of an individual angle, and I_h is twice the I of each angle about the axis parallel to the Y-Y axis.

(b) Where the battens consist solely of unstiffened plates, ϕ_y may be taken as:

$$\phi_Y = \frac{K}{1 + \frac{\alpha \pi^2 l_{b1} A_e r_y^2}{12 l_y^2}\left[\frac{12c}{d_b^3 t_b n} + \frac{36}{c d_b t_b n} + \frac{\frac{\alpha l_{b1}}{2 I_n}}{1 - \frac{l_{b1}^2 A_e r_y^2 \phi Y}{2 l_y^2 I_{min}}}\right]}$$

where

d_b = Overall length of a batten in the direction parallel to the longitudinal axis of the member

t_b = Thickness of batten

All other parameters are as defined in (a).

M.3 Members where the faces parallel to the Y-Y axis are also battened

(a) In general, ϕ_X may be calculated from the equation for f_Y in **M.2(a)** by substituting:

l_x, r_x, P_{EX} as defined in 10.8.3 or 10.8.5 for l_y, r_y, P_{EY} and using

c = Distance parallel to the Y-Y axis between the centroidal axes of the main components

A_b, l_{b1} and h as related to the battens parallel to the Y-Y axis.

I_h = Second moment of area of a main component or the sum of the second moments of area to one side of the X-X axis of main components about its or their centroidal axis parallel to the X-X axis

(b) Where the battens consist solely of unstiffened plates, ϕ_X may be calculated from the equation for ϕ_Y in **M.2(b)** by substituting:

l_x, r_x, as defined in 10.8.3 for l_y, r_y, and using

c = Distance parallel to the Y-Y axis between the centroidal axes of the main components

l_b, d_b, t_b and h as related to the battens parallel to the Y-Y axis

I_h = Second moment of area of area of a main component or the sum of the second moments of area of main components to one side of the X-X axis about its or their centroidal axis parallel to the X-X axis.

Add new ***Annex N***

Annex N (Informative)

Modified critical buckling stress of stiffened panels utilising orthotropic actions

N.1. Determination of critical buckling stress for stiffened flange or web panels

N.1.1 General

The critical buckling stress for stiffened panels bounded by stiff supports and subject to one type of uniformly distributed edge applied stress may be determined as follows. Effective values of uniform boundary stress on such panels in which the boundary stresses vary may be determined as described in **Annex L 9.1** by assuming stiffener forces and stiffnesses to be smeared into the effective associated plate.

The parameters used in the equations are defined in **N.3** and Figure N.1.

N.1.2 Uniform Uniaxial Compression

The critical buckling stress for a panel under uniform uniaxial compression alone is given by:

$$\sigma^*_{crl} = \frac{\pi^2}{b_s^2 t_{eff}}\left[k_o\sqrt{D_x D_y} + 2H\right]$$

where $$t_{eff} = t\left(1 + \frac{NA_{sx}}{b_s t}\right)$$

N = number of stiffeners within the width b_s
t = plate thickness
K_o is a buckling coefficient obtained from Figure N.4, with ψ = +1.0 using:

$$\phi' = \frac{l}{b_s}\left(\frac{D_{yl}}{D_x}\right)^{1/4}$$ for overall buckling

or

$$\phi' = \frac{a}{b_s}\left(\frac{D_{y2}}{D_x}\right)^{1/4}$$ for buckling between transverse stiffeners

N.1.3 Shear

The critical buckling stress for a panel in plane shear only is given by the greater of:

$$\tau^*_{cr} = \frac{K_s\pi^2}{a' b_s t}\sqrt{D_x D_y}\left(\frac{a'}{b_s}\sqrt[4]{\frac{D_y}{D_x}}\right)$$

or

$$\tau^*_{cr} = \frac{K_s\pi^2}{a' b_s t}\sqrt{D_x D_y}\left(\frac{b_s}{a'}\sqrt[4]{\frac{D_x}{D_y}}\right)$$

where K_s is a buckling coefficient obtained from Figure N.2
D_y = D_{y1} or D_{y2} as appropriate to the mode of buckling
a' = *l* for overall buckling
= a for buckling between transverse stiffeners

N.1.4 In-plane bending

The critical buckling value of the maximum longitudinal stress for a panel under in-plane bending about its central axis alone is given by:

$$\sigma_{b_{cr}} = \frac{\pi^2}{b_s^2 t_{eff}}\left[K_o\sqrt{D_x D_y} + (K_i - K_o)H\right]$$

where K_o is a buckling coefficient obtained from Figure N.4 with ψ =-1
K_i is a buckling coefficient obtained from Figure N.3 with ψ =-1
both using

$$\phi' = \frac{l}{b_s}\left(\frac{D_{y1}}{D_x}\right)^{1/4}$$ for overall buckling, or

$$\phi' = \frac{a}{b_s}\left(\frac{D_{y2}}{D_x}\right)^{1/4}$$ *for buckling between transverse stiffeners*

N.1.5 In-plane bending and compression

The critical buckling value of the maximum longitudinal stress for a panel under longitudinal stress alone, varying linearly across the width of the panel is given by:

$$(\sigma_{1max})^*_{cr} = \frac{\pi^2}{b_s^2 t_{eff}}\left[K_o\sqrt{D_x D_y} + (K_i - K_o)H\right]$$

where K_o and K_i are buckling coefficients obtained from Figures N.4 and N.3 respectively with σ_{1max} and
$\psi_{\sigma 1max}$ being the stresses on each side of the panel and with ϕ' as defined in **N.1.4.**

N.2 Sub-panel buckling

N.2.1 General

In addition to deriving the load factor, λ_b, against overall buckling (hereafter referred to as λ_{boa}) in accordance with **N.1**, **N.3** and **N.4** which allows for the benefit of orthotropic action as several stiffeners buckle in the same direction, the relevant sub-panel buckling modes must also be considered. These allow for the destabilising effects of longitudinal, transverse and shear stresses in the adjacent plate panels on possible stiffener buckling modes as required in accordance with **9.10.2.3** for flange stiffeners, **9.11.5.2** for web stiffeners and **9.17.6.7** for diaphragm stiffeners.

Two basic modes must be considered:

(i) sub-panel buckling mode 1 (spb1) in which adjacent stiffeners buckle in opposite directions; and
(ii) sub-panel buckling mode 2 (spb2) in which alternate stiffeners remain generally straight and the stiffeners in between buckle in opposite directions. This mode will always apply when there is only one longitudinal stiffener in a stiffened panel.

In consideration of these modes, due allowance may be made for the benefit of the stabilising effect of plate, particularly in cases where the plates are stocky (or relatively lowly stressed) by use of the plate critical stresses and the associated plate buckling factor, λ_p. In addition, due allowance must be made for the coupled behaviour of the resulting mode of the stiffener buckling and the plate buckling.

Expressions for deriving the factors against sub-panel buckling, λ_{spb1} and λ_{spb2} for modes (i) and (ii) respectively are given in **N.2.2**. Guidance on improved strength derivation is given in **N.2.3**. Methods for the derivation of plate effectiveness and the associated effective widths of plates to be used are given in **N.6** and **N.7** respectively. These are applicable to all modes.

N.2.2 F actor Against Sub-Panel Buckling

The factor against buckling for sub-panel buckling mode 1, λ_{spb1}, may be taken as:

$$\lambda_{spb1} = \frac{\sigma_{cre1} + \frac{t}{t_{eff1}}\left[\sigma_{cr1}^{*'} + 0.4\left(\frac{a_s}{b}\right)^2\left(\frac{t}{t_{eff2}}\right)\sigma_{cr2}^{*'} + \tau_{cr}^{*'}\right]}{\sigma_{1eff} + \frac{t}{t_{eff1}}\left[0.4\left(\frac{a_s}{b}\right)^2\left(\frac{t}{t_{eff2}}\right)\sigma_{2eff} + \tau_{eff}\right]}$$

and for mode 2, λ_{spb2} may be taken as:

$$\lambda_{spb2} = \frac{\sigma_{cre1} + \frac{t}{t_{eff1}}\left[\sigma_{cr1}^{*'} + 0.1\left(\frac{a_s}{b}\right)^2\left(\frac{t}{t_{eff2}}\right)\sigma_{cr2}^{*'} + \tau_{cr}^{*'}\right]}{\sigma_{1eff} + \frac{t}{t_{eff1}}\left[0.1\left(\frac{a_s}{b}\right)^2\left(\frac{t}{t_{eff2}}\right)\sigma_{2eff} + \tau_{eff}\right]}$$

where:

$\sigma_{cr1}^{*'}, \sigma_{cr2}^{*'}$ and $\tau_{cr}^{*'}$ for mode 1 are the modified critical stresses for direct stress, transverse stress and shear stress respectively to cause buckling of the panels of size a_s x b adjacent to the stiffener under the combined action of the component stresses σ_{1eff}, σ_{2eff} and σ_{eff} derived in accordance with the procedure in **N.4**, with $\phi = \frac{a_s}{b}$;

$\sigma_{cr1}^{*'}, \sigma_{cr2}^{*'}$ and $\tau_{cr}^{*'}$ in mode 2 are the equivalent values derived for a panel of size a_s x 2b and $\phi = \frac{a_s}{2b}$, i.e. allowing for alternate stiffeners being straight and not buckling or applying when there is only one intermediate longitudinal stiffener;

σ_{cre1} is the Euler critical buckling stress of the effective stiffener section given by $\frac{(\pi^2 EI_{OX})}{(a_s^2 bt_{eff})}$;

I_{OX} is the second moment of area of the effective stiffener section including a total effective width of plating k_{bt} x b (for spb mode 1) and K_{bt} x 2b (for spb mode 2);

k_{bt} is the tangent effective width of plating associated with the stiffener under consideration, see **N.7**;

b is the spacing of equally spaced stiffeners (see NOTE 1 for unequal spacing);

a_s is the length of the stiffener in direction 1 between main cross members or other points of attachment providing full restraint against buckling;

t is the actual thickness of the attached plating on either side of the stiffener under consideration (see NOTE 1 for unequal thicknesses);

t_{eff1} is the effective plate thickness in direction 1, given by $t\left(1 + \frac{A_{SX}}{bt}\right)$, where A_{SX} is the area of the stiffener under consideration in direction 1; and

t_{eff2} is the effective plate thickness in direction 2, given by $t\left(1 + \frac{\Sigma A_{S2}}{a_s t}\right)$, where ΣA_{S2} is the sum of any secondary stiffeners in direction 2 (i.e. orthogonal to the main stiffener under consideration); for most sub-panel buckling cases ΣA_{S2} will be zero and if there is any variation of size or spacing $\frac{\Sigma A_{S2}}{a_S}$ should be based on stiffeners in the middle third of the length a_s

NOTE 1: In cases of unequal spacing (b) and/or variation of thickness (t) either side of the stiffener under consideration I_{OX} should be based on a section comprising A_{SX} together with associated effective plating given by ½(K_{bt1} b_1 t_1 + K_{bt2} b_2 t_2), where K_{bt1}, b_1, t_1 and K_{bt2}, b_2, t_2 applying to the plating either side of the stiffener. Elsewhere, such as for ϕ and t_{eff1}, b may be taken as ½ (b_1 + b_2).

In all cases the sub-panel buckling mode is considered to be of a single half wavelength (as), which must also be applied to critical stresses for the plate panels. Values of λ_{spb1} and λ_{spb2} must be derived for each stiffener in a multistiffened panel with due allowance for any variation of σ_1, τ and σ_2 (i.e. particular σ_1 in web panels). The minimum value of λ_{spb1}, λ_{spb2} and λ_{boa} (as derived for the whole stiffened panel) must then be adopted as the governing λ_b for each stiffener.

N.2.3 Derivation of Strength – General

The capacity of each effective longitudinal stiffener must be checked for both the tip of the stiffener outstand and for the junction with the attached plate boundary, with stresses appropriately magnified for the governing (minimum) load factor against buckling, λ_b. derived from **N.2.2**. Each stiffener strictly requires separate checks on both aspects, although generally for multi-stiffened panels with uniform equally spaced stiffeners the governing stiffener may be apparent by inspection (e.g. when the maximum shear stress and maximum longitudinal compressive stress are concurrent on the same stiffener). The checks need to make due allowance for in-built residual stresses and assumed values of initial imperfections. Requirements for the outstand check are given in **N.2.4** and requirements for the plate boundary check are given in **N.2.5**. Methods for treatment of residual stresses and imperfections are given in **N.2.6**.

N.2.4 Stiffener Outstand Checks

(i) Conservative checks may be made by using **10.2.3 (a)** (flanges), **9.11.5.2** (webs) and **9.17.6.7** (diaphragms) as appropriate but in each case using rse (see NOTE 1) modified to:

$$r_{se} = \left(\frac{a_s}{\pi}\right)\sqrt{\frac{\lambda_b \sigma_{se}}{E}} \text{ , i.e. } \lambda_{se} = 75\sqrt{\frac{\sigma_{ys}}{\lambda_b \sigma_{se}}}$$

where:

λ_{se} is the equivalent λ for use on Figure 18 or 23;

λ_b is the governing (minimum) factor against buckling (see **N.2.2** and **N.2.3**);

σ_{se} is the appropriate equivalent stress in the stiffener in accordance with **9.10.2.3(a)** (see NOTE 2), **9.11.5.2** and **9.17.6.3.4** for flanges, webs and diaphragms respectively; and

a_s is the length of stiffener (i.e. l for flanges, a for webs and ls for diaphragms) compatible with the use in **N.2.2.**

NOTE 1: It should be noted that this procedure is iterative due to the dependence of the slenderness parameter, λ, as well as the buckling coefficients (k_s and k_l) on r_{se}. To allow for the variation of initial imperfections (and residual stresses, if required) as well as effective stress levels in the plate via use of modified effective widths of plate, the procedure in **N.2.6** and **N.7.4** may be used.

NOTE 2: for flanges $\sigma_{se} = \sigma_a + 2.5\ \tau_i\ K_{S1}$ as per **9.10.2.3(a).**

(ii) Alternatively, to obtain the maximum capacity and benefits, the stiffener outstand stress (σ_O) may be derived from IDWR clause **20.3.3** using values derived in accordance with **20.3.1**, but with total assumed initial imperfection (Δ_O) and residual stresses (σ_{Rb} and σ_{ORS}) derived in accordance with **N.2.6**. The stiffener outstand stress (σ_o) should then be checked against the limiting outstand stress allowing for torsional buckling (i.e. the 'lower yield stress' σys of the stiffener as specified in **9.3.1** of NRA BD 56). For maximum benefit the lower (limiting) value of σ_{ys} may be derived in accordance with **Annex S** rather than use of **9.3.4** or **Annex C** of NRA BD 56. The effective width of plating for derivation of stresses should be based on K_{bs}, the secant effective width of plating, see **N.7.**

Note 3: Torsional buckling limiting stress should not be derived from IDWR clause **20.3.4** as this may produce an overestimate of the outstand limiting stress.

N.2.5 Plate Boundary Check

(i) Conservative checks may be made by using the same NRA BD 56 clauses given in **N.2.4(i)** using rse also as set out in **N.2.4 (i)** but using the plate limiting stress in place of the outstand limiting stress. Thus for flanges the modified $\sigma_{se} = \sigma_a + 2.5\ \tau_i\ K_{S2}$ (as per **9.10.2.3(b)**) is checked against a modified $k_{l2}\ \sigma_{ye}/\gamma_m\gamma_{f3}$. For webs a conservative check may be made by taking $\sigma_{se} = \sigma_{yw}\ (m_c + m_b + 3_{mq})$, where γ_{yw}, m_c, m_b and m_q are derived in accordance with **9.11.4**.

NOTE 1: It should be noted that this procedure is iterative due to the dependence of the slenderness parameter, λ, as well as the buckling coefficients (k_s and k_l) on r_{se}. To allow for the variation of initial imperfections (and residual stresses, if required) as well as effective stress levels in the plate via use of modified effective widths of plate, the procedure in **N.2.6** and **N.7.4** may be used.

(ii) Alternatively, in order to obtain the maximum capacity and benefits, the stress at the plate/stiffener junction, i.e. the plate boundary stress (σ_b) may be derived from IDWR clause **20.3.2**. using values derived in accordance with 20.3.1 but with total assumed initial imperfections (Δ_O) and residual stresses (σ_{Rb} and σ_{prs}) derived in accordance with **N.2.6**, and then checked against the limiting boundary stress (σ_{BL}) derived in accordance with IWDR clause **20.2.2d**. The effective width of plating should be based on K_{bs} the secant effective width of plating, see **N.7**.

N.2.6 Allowance for Variation of Residual Stresses and Imperfections

Residual stresses are not dealt with explicitly in either NRA BD 56 or BS 5400-3. All the rules have a built-in assumption of actual residual stress assumed at a level of 10% of yield. The effect of these is generally small in design, particularly in the case of non-slender elements. However for assessment, particularly for web panels, these levels of stress can be a high proportion of basic capacity when very slender panels and stiffeners are assessed. The separate effect of variation of plate and stiffener initial imperfections on strength (measured, specific or assumed) can be dealt with by the relevant rules in NRA BD 56 for longitudinal stiffener and plate panel checks. However, the combined effect of variation of residual stresses and initial imperfections on effective widths of plates may be allowed for in accordance with **N.7.4**.

In cases where residual stresses are known or can be shown to be less than 10% of yield, or where residual stresses can be treated as equivalent imperfections, particularly for b/t and/or $l/r_{se} \geq 60$, the full procedure of clauses 18 and 19 of the IDWR may be used to potentially derive the maximum benefit. clause 7 of the IDWR may be used to derive residual stresses where required.

The IDWR allows imperfections to be fully considered and also allows some residual stresses to be replaced as equivalent imperfection; an added benefit when assessment strength capacity is low. Again for b/t and/or $l/r \geq 60$, the full procedure of clauses 18, 19 and 20.3 of the IDWR may be used to obtain additional benefit, as set out in **N.2.3** to **N.2.5** above for strength, **N.6** for plate buckling actor (λ_p) and **N.7** for secant effective width (K_{bs})

N.3 Evaluation of parameters for calculating the critical stress for a stiffened panel

The values of the stiffness parameters of a panel must be evaluated as follows, with coordinate axes and panel dimensions shown in Figure N.1.

I_{ox}, I_{oy} The cross section of the stiffener must include an effective width of plating on each side as defined in **9.10.2.2** with values appropriate to the effective in-plane stresses in the plating elements, with due allowance for out-of-plane bending of the stiffened panel. Where the effective cross-section of a stiffener varies along its length, the average value of I must be used. For vertical web stiffeners in panels designed as having fully restrained boundaries the effective width on each side must be as defined in **9.11.5.**

J_x, J_y For stiffeners having "open" type cross section, eg angles, flats, (see Figure N.5(A)):

$$J = \frac{dt_s^3}{3} + \frac{b_c t_F^3}{3}$$

For bulb flats (See Figure N.5(B)):

$$= \frac{dt_s^3}{3} + \frac{(b_c - t_s)t_F^3}{4.8}$$

For stiffeners having "closed" type cross section (See Figure N.5C):

A_c = The area enclosed by the mid-planes of the stiffener walls.

A_{sx}, A_{sy} For stiffeners having "open" type cross section:
$A_s = d_{ts} + t_F (b_c - t_s)$ (See Figure N.5(A)) or as given in steel section Tables.)
For bulb flat stiffeners:
A_s is given in steel section Tables.
For stiffener s having "closed" type cross section:
$A_s = d_2t_2 + d_3t_3 + d_4t_4$ (See Figure N.5C).

ν, ν_x, ν_y $\nu = 0.3$

$$\nu_x = 0.3\left(\frac{at}{A_{sy} + at}\right)$$

$$\nu_y = 0.3\left(\frac{bt}{A_{sx} + bt}\right)$$

D_xD_yH:

(a) Multi-stiffened panels with stiffeners at equal spacing and of the same size.

For overall buckling and for buckling between transverse stiffeners or between transverse stiffeners and the transverse boundary to the panel.

$$D_x = \frac{EI_{ox}}{b} + (1 - K_c)\frac{Et^3}{12(1 - \nu_x\nu_y)}$$

For overall buckling of a panel with transverse stiffeners:

$$D_{y1} = \frac{EI_{oy}}{a} + (1 - f)\frac{Et^3}{12(1 - \nu_x\nu_y)}$$

For buckling between transverse stiffeners or overall buckling of a panel with longitudinal stiffeners only:

$$D_{y2} = \frac{Et^3}{12(1 - \nu_x\nu_y)}$$

where K_c is derived from **9.10.2.2**

$$f = \left\{\frac{\textit{The total effective width of plate acting with transverse stiffeners}}{\textit{Spacing of transverse stiffeners}}\right\}$$

For overall buckling of a panel with rigidly interconnected longitudinal and transverse stiffeners:

$$H = \frac{1}{2}\left(v_x D_y + v_y D_x\right) + \frac{Gt^3}{6} + \frac{G}{2}\left(\frac{J_x}{b} + \frac{J_y}{a}\right)$$

For overall buckling of a panel with stiffeners in the x-direction only or when stiffeners are not rigidly interconnected and for buckling between transverse stiffeners:

$$H = \frac{Gt^3}{6} + \frac{GJ_x}{2b}$$

b) When the longitudinal stiffeners are unequal or unequally spaced, the critical stresses may be obtained by assuming the panel to be equivalent to one having uniform longitudinal stiffness per unit width equal to the average stiffness within the compression zone in the case of pure compression and pure in-plane bending, and to the average stiffness in the entire stiffened panel in the case of shear. In assessing the average stiffness the effective stiffness of each stiffener must be related to its position in the panel as follows. For compression and shear the effective second moment of area of any longitudinal stiffener must be taken as:

$$I_{s_{ef}} = 1.5 I_{ox}\left(1 - \frac{4y_s^2}{b_s^2}\right)\left(\frac{N+1}{N+2}\right)$$

where

I_{ox} = The second moment of area of the stiffener
b_s = The width of the stiffened panel at right angles to the stiffener
y_s = The distance from the centre of the stiffened panel to the stiffener
N = Number of longitudinal stiffeners.

For in-plane bending the effective second moment of area must be taken to vary linearly from zero, when the stiffener is on the boundary or on the neutral axis to $2I_{ox}$ when it is located at a distance from the compression boundary equal to 0.2 times the distance from that boundary to the neutral axis.

When transverse stiffeners are equally spaced but of unequal stiffness, the value of Ioy must be taken as the mean value for the members contained within the half wavelength or, when the half wavelength equals twice the stiffener spacing, the value for the central stiffener.

N.4 Interaction between stresses

When a panel is subject to more than one coincident type of applied in-plane stress the critical values of stress to cause buckling are modified by interaction. For rectangular panels the interactions for certain simple stress patterns are shown in Figures N.6 A to E. The curves define the coincident ratio, R', of each stress resultant to its unmodified critical value when acting in isolation, which is necessary to cause buckling. The ratios σ_1/σ^*_{cr1}, σ_b/σ^*_{bcr}, τ/τ^*_{cr} when acted on by a buckling factor λ_b to satisfy the appropriate interaction curve in Figures N.6A to E must be found such that:

$\sigma^{*\prime}_{cr1} = \lambda_b\, \sigma_1 \quad = R'_1\, \sigma^*_{cr1}$
$\sigma^{*\prime}_{cr2} = \lambda_b\, \sigma_2 \quad = R'_2\, \sigma^*_{cr2}$
$\sigma^{*\prime}_{bcr} = \lambda_b\, \sigma_b \quad = R'_b\, \sigma^*_{bcr}$
$\tau^{*\prime}_{cr} = \lambda_b\, \tau \quad = R'_s\, \sigma^*_{cr}$

σ^*_{cr1}, σ^*_{cr2}, σ^*_{bcr} and τ^*_{cr} are the critical values of the stress resultants when acting alone a defined in **N.1**.
$\sigma^{*\prime}_{cr1}$, $\tau^{*\prime}_{cr1}$ etc are defined as the critical values of the stress resultants when acting together.

σ_1, σ_2, σ_b and τ are the coincident ULS factored applied stresses or, for complex stress systems, their effective values obtained from **Annex L.9**.

In using the curves in Figures N.6A to E, the aspect ratio ϕ must be taken as

$$\phi = \left(\frac{D_x}{D_y}\right)^{1/4}$$

For the calculation of the critical values of stress resultants in plate panels without intermediate transverse stiffeners, Figures N6A to E may be used, see **N.6** below, taking ϕ as a_s/b in place of $(D_x/D_y)^{1/4}$, where for sub-panel mode 1 as and b are the dimensions of the panel under coincident stresses requiring interaction. Where required the plate buckling factor λ_p must be derived using the expressions above for λ_b using the appropriate plate critical stresses. Plate critical stresses may be obtained from standard references or may conservatively be taken from Figures N.2 or N.3, as appropriate, with $(D_x/D_y)^{1/4} \Rightarrow 1.0$ and $H/\sqrt{D_xD_y} \Rightarrow 1.0$ as follows:

For sub-panel buckling mode 1:

$$\sigma^*_{cr1} = \frac{K_i \pi^2 E}{12(1-\nu^2)}\left(\frac{t}{b}\right)^2 \text{ with } K_i \text{ from Figure N.3 using } \phi = \frac{a_s}{b}, \psi = +1.0$$

$$\sigma^*_{cr2} = \frac{K_i \pi^2 E}{12(1-\nu^2)}\left(\frac{t}{a_s}\right)^2 \text{ with } K_i \text{ from Figure N.3 using } \phi = \frac{b}{a_s}, \psi = +1.0$$

$$\sigma^*_{b1cr} = \frac{K_i \pi^2 E}{12(1-\nu^2)}\left(\frac{t}{b}\right)^2 \text{ with } K_i \text{ from Figure N.3 using } \phi = \frac{a_s}{b}, \psi = -1.0$$

$$\sigma^*_{b2cr} = \frac{K_i \pi^2 E}{12(1-\nu^2)}\left(\frac{t}{a_s}\right)^2 \text{ with } K_i \text{ from Figure N.3 using } \phi = \frac{b}{a_s}, \psi = -1.0$$

$$\tau^*_{cr} = \frac{K \pi^2 E}{12(1-\nu^2)}\left(\frac{t}{b}\right)^2 \text{ with K from Figure N.2 using } \frac{b}{a_s}$$

For sub-panel buckling mode 2, the plate critical stresses are obtained as for mode 1, but with b replaced by 2b throughout.

NOTE: If $\frac{b}{a_s} > 1.0$, use $\frac{b}{a_s}$ for τ^*_{cr} for mode 1; similarly of $\frac{2b}{a_s} > 1.0$, use $\frac{a_s}{2b}$ for τ^*_{cr} for mode 2

as, b and t are all defined in N.2.2.

See also N.6 on plate buckling factor λ_p.

N.5 Half-wavelengths of buckling

The half-wavelengths of buckling to be adopted as the gauge lengths to be used in the measurement of initial but-of-plane deformations of stiffened panels in compression may be taken as *l*/m when overall buckling governs, where m is the integer value appropriate to the values of ψ and ϕ', within the boundaries of the dotted lines on Figure N.4.

For both sub-panel buckling modes (1 and 2), the half wavelength of buckling must be taken as a_s, the length of stiffener in direction 1 between main cross members or other points of attachment providing full restraint against buckling compatible with the implied mode of behaviour considered in **N.2** resulting from the destabilising effects of transverse and/or shear stress. Thus for flanges a_s is taken as l, for webs a_s is taken as a and for diaphragms a_s is taken as l_s.

N.6 Effectiveness of Plate and Factor against Plate Buckling, λ_p

For sub-panel buckling considerations (see N.2) the modified critical stresses may be considered as the product of λ_p and each effective applied stress (see N.4). Thus, those products may be used in the expressions for λ_{spb1} in **N.2.2(i)** by using:

$$\sigma^{*\prime}_{cr1} = \lambda_{p1}\sigma_{1eff} = R'_1\sigma^*_{cr1} \;;$$

$$\sigma^{*\prime}_{cr2} = \lambda_{p1}\sigma_{2eff} = R'_2\sigma^*_{cr2} \;; \text{ and}$$

$$\tau^{*\prime}_{cr} = \lambda_{p1}\tau_{eff} = R'_\tau\tau^*_{cr}$$

where:

λ_{p1} is the factor against plate buckling of the combined action of component stresses σ_{1eff}, σ_{2eff} and τ_{eff} on the panel of size a_s x b.

Similarly for sub-panel buckling mode 2, λ_{spb2} in **N.2.2(ii):**

$$\sigma^{*\prime\prime}_{cr1} = \lambda_{p2}\sigma_{1eff} = R''_1\sigma^*_{cr1} \;;$$

$$\sigma^{*\prime\prime}_{cr2} = \lambda_{p2}\sigma_{2eff} = R''_2\sigma^*_{cr2} \;; \text{ and}$$

$$\tau^{*\prime\prime}_{cr} = \lambda_{p2}\tau_{eff} = R''_\tau\tau^*_{cr}$$

where:

λ_{p2} is the factor against plate buckling of the combined action of component stresses σ1eff, σ_{2eff} and τ_{eff} on the effective panel of size a_s x 2b.

Values of λ_{p1} and λ_{p2} may be derived separately for each case, as set out in **N.4** above, using the same basis as

that used for $\lambda_p = \frac{R\prime_1\sigma_{cr1}}{\sigma_{1eff}} = \frac{R\prime_2\sigma_{cr2}}{\sigma_2} = \frac{R\prime_b\sigma_{bcr}}{\sigma_b} = \frac{R\prime_s\tau^*{}_{cr}}{\tau}$. For most cases, variation of in plane bending stress

may be considered by adding one sixth of the bending stress to the direct stress. Variation of stresses along the length or across the width of the panels may be considered by taking the highest compressive value in the middle third. Note that both these considerations may need to be considered separately for spb1 and spb2 and again separately for the overall orthotropic mode, where bending stress over the whole panel should generally be considered explicitly.

Alternatively, clause 19 of the IDWR may be used, particularly for interaction of stresses varying in a complex manner, particularly in cases where the IDWR is also being used for associated strength checks in accordance with **N.2.4** to **N.2.5**, derivation and use of residual stresses and imperfections using **N.2.6** and effective widths of plating (see **N.7**).

N.7 Effective Widths of Plating

N.7.1 Tangent Effective Width, K_{bt}, for Stiffness

(a) The tangent effective width, K_{bt}, is required for use in deriving I_{OX} (see **N.2** and **N.3**). Conservative values of K_{bt} for flanges are given in **9.10.2.2** in NRA BD 56, i.e. $K'_c{}'$, which may also be approximately applied to any elements acting primarily under direct stress where transverse stress or shear are negligible. Thus a conservative total effective width of 0.5b may be used to cater for any plate slenderness or level of compression. However advantage may be taken of slenderness and variation of direct stress, σ_a, by using Figure 5B.

(b) For webs, the conservative value of total effective width is $32t_w$ (1-ρ) but not exceeding b(1-ρ) in accordance with **9.11.5.1**. Although more accurate methods of deriving K_{bt} are available and may be used, generally little advantage is gained for effective stiffener stiffness. The procedure given in IDWR clause18 to derive K_{bt} may be used, particularly where use is being made of the IDWR in deriving λ_p for plate buckling in accordance with **N.6** and/or for K_{bs}, the secant width for strength in accordance with **N.7.2**.

(c) For flanges or webs, under combined stresses, variation of imperfection or residual stress, conservative values of K_{bt} may be derived (if required) in accordance with **N.7.4(b).**

(d) For other elements effective widths should be taken as those used in the effective section, i.e. as defined in **9.13.2** (or **9.14.2**) for transverse web stiffeners, **9.15.2** for flange transverse members, **9.16.4.1** for ring frames and **9.17.4.4** for diaphragm stiffeners.

N.7.2 Secant Effective Width, K_{bs}, for Stress or Strength

The secant effective width, K_{bs} is required for use in deriving stresses for checking the strength of the effective stiffener section. The appropriate values set out for K_{bt} in **N.7.1** may be conservatively used. A simplified approach may be used for element under primarily direct stress by using K'_c from Figure 5A in **9.10.2.2**. For combined stresses a conservative value of K_{bs} be obtained in accordance with **N.7.4(a).** However the degree of conservatism could limit the strength, particularly in the case of derivation of r_{se} and consequent benefits when considering subpanel buckling modes or orthotropic actions, particularly for webs. The procedure given in clause **18** of the IDWR may be used, which enables full benefit of levels of plate stress to be obtained as well as allowing for any level of initial imperfections and residual stress, see **N.2.6**.

N.7.3 Edge Restraint

For the majority of cases of sub-panel buckling (and overall orthotropic buckling) edge restraint will apply and advantage may be taken. It should be noted that Figures 5A and 5B in **9.10.2.2** are for edges free to pull in (i.e. without edge restraint), resulting in the minimum values of 0.5 for K'_C and K''_C . The corresponding minimum for restrained panels is 0.67 but with typical values of imperfections with residual stresses considered as stress, secant effective widths may be 0.75 or higher. Thus for b/t less than 40, there may be only marginal extra benefit from using a more thorough approach and '32t' may be used for most cases, e.g. Kbs = 0.8 when b/t = 40. For b/t in the range of 40 to 50, K'_C where appropriate or '32t' may be used, as the variation of K_{bs} when fully derived may be similarly in the range of 0.8 (at b/t of 40) to 0.64 (at b/t of 50). However, for b/t values in excess of 50 the full procedure in the IDWR may be used if required to obtain maximum benefit in values of K_{bs}, for example at b/t of 80, 32t will only provide a K_{bs} of 0.4, whereas the full procedure will provide K_{bs} in excess of 0.67 for restrained panels. Also the values required for the '2b' case of spb mode 2 need to be particularly considered, as they will always be at higher effective b/t, i.e. 2b/t.

N.7.4 Effective Widths under the Action of Combined Stresses, Varying Imperfections and Residual Stresses

(a) Under the action of combined stresses a conservative value of K_{bs} may be taken as K'_C from Figure 5A using $\sigma'_a \Rightarrow K'_c \gamma_m \gamma_{f3} \sigma_{se}$ in Figure 5A, where σ_{se} is the equivalent effective stress taken as the greater of the values derived from **N.2.4** or **N.2.5**. If adjustment is required for residual stress or imperfection (see **N.2.6**), this can be allowed by use of Annex P using σ_R as required in place of $0.1\sigma_{ye}$ and Δ_X as 1.2 x the initial imperfection in the plating (measured, specified or assumed).

(b) A similar procedure may be used (if required) for Kbt, using the same criteria set out in (a) but for K_{bt} taken as K''_C using the same procedure on Figure 5B, i.e. $\sigma'_a \Rightarrow K'_c \gamma_m \gamma_{f3} \sigma_{se}$. .

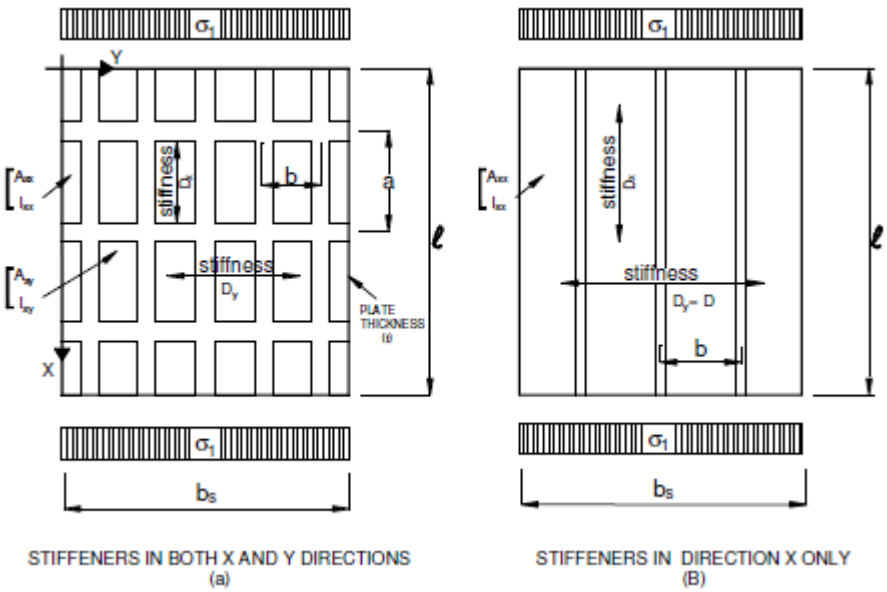

Figure N1

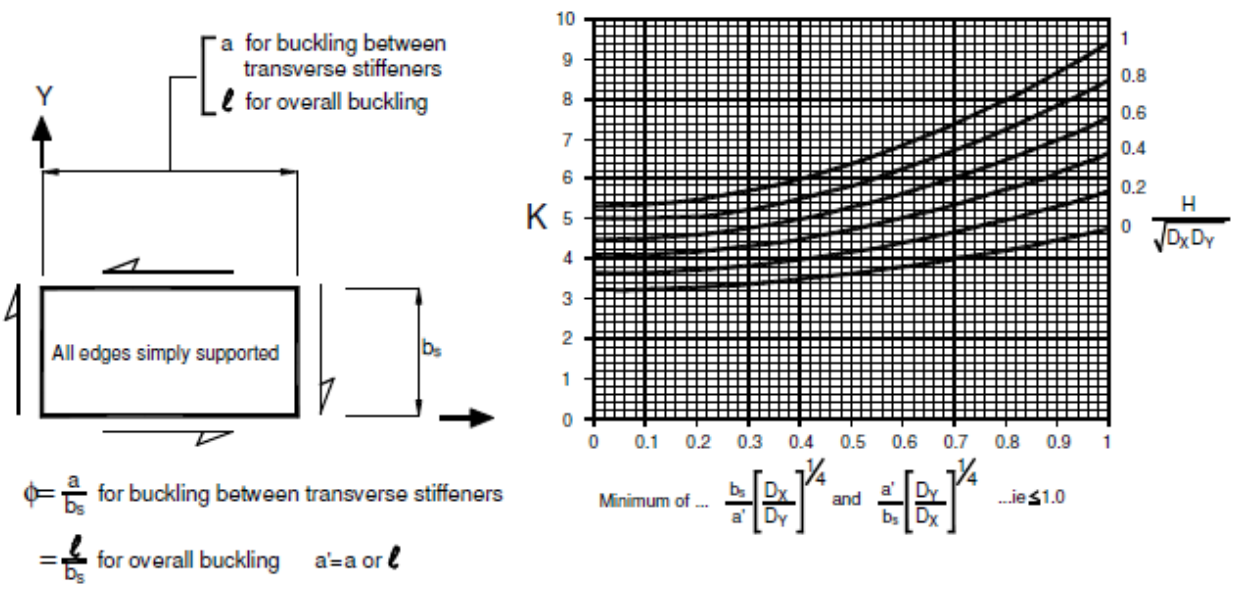

Figure N2

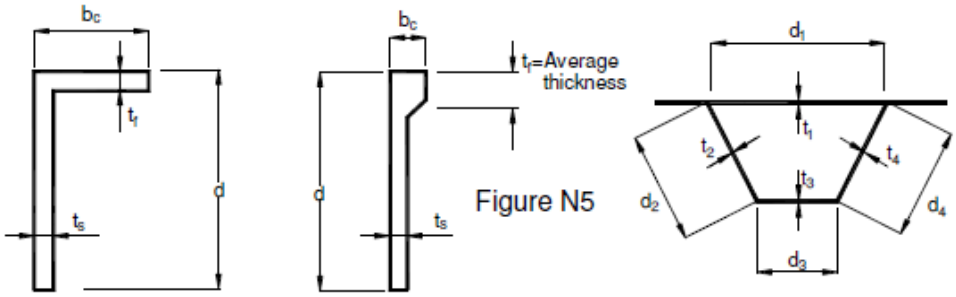

Figure N5A **Figure N5B** **Figure N5C**

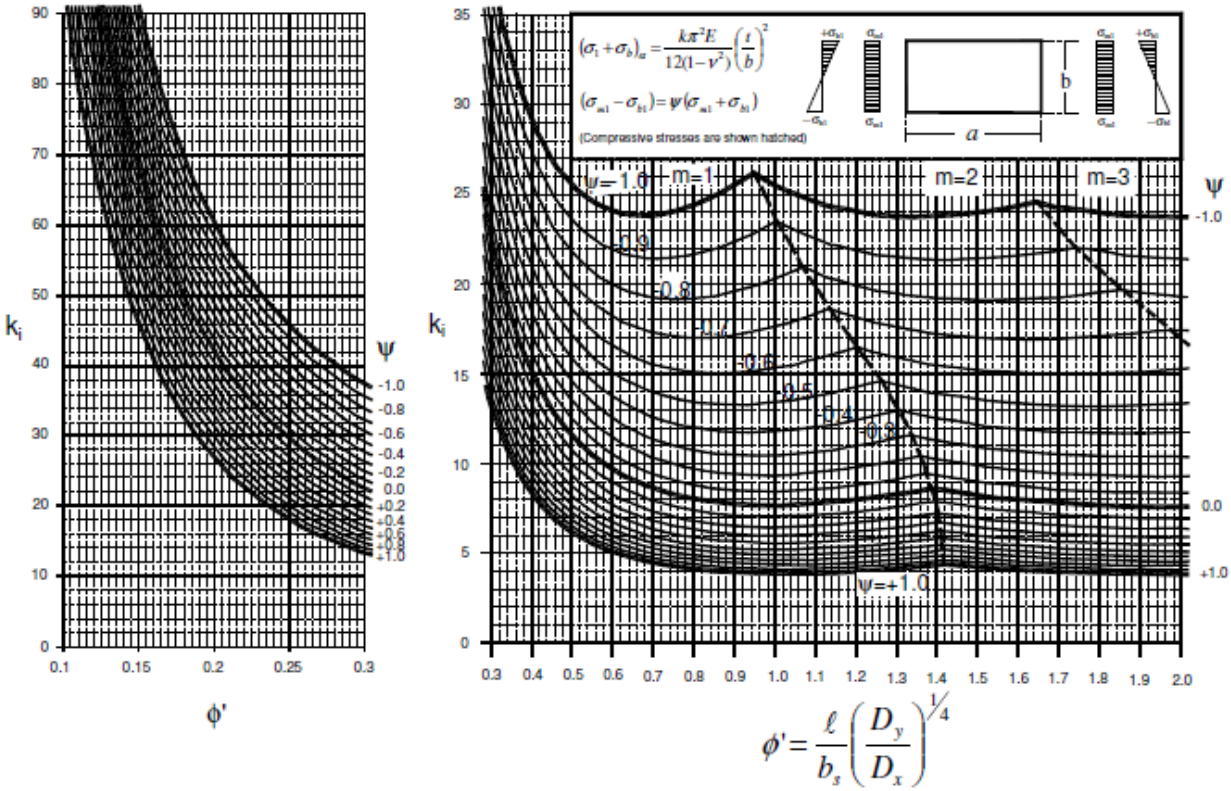

Figure N.3: Simply supported rectangular plates with linearly varying edge stresss values of k_i

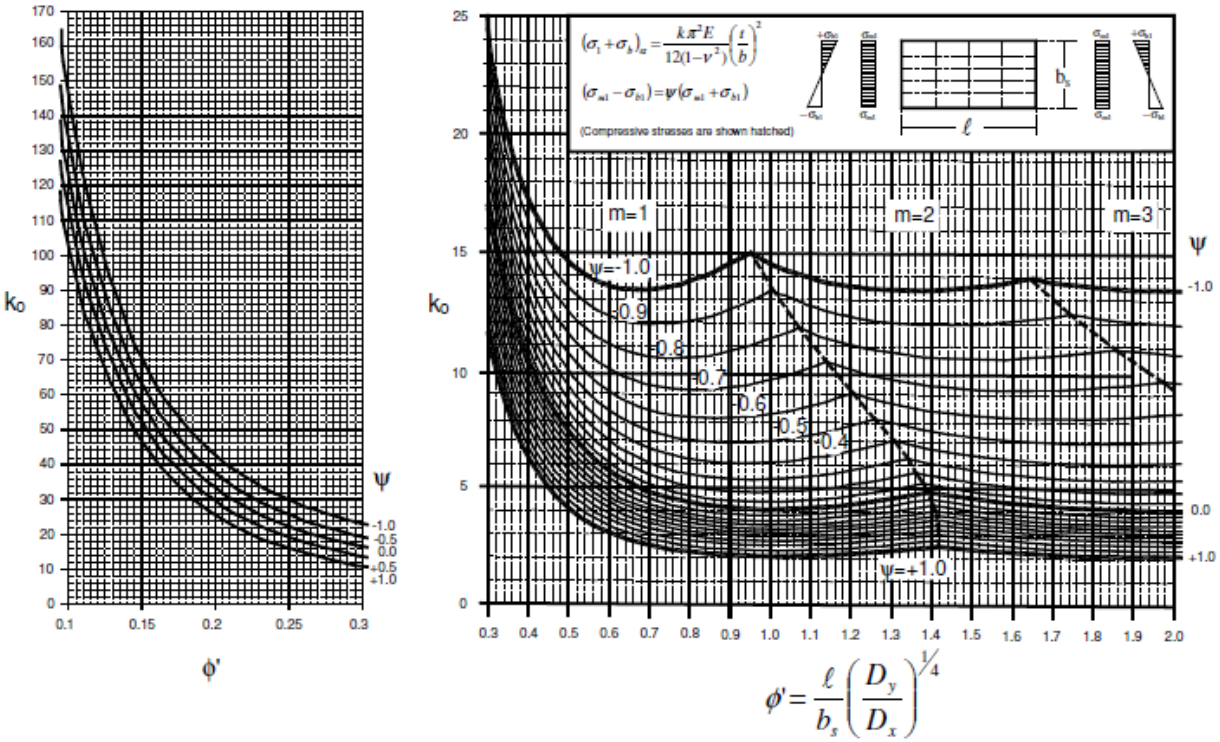

Figure N.4: Simply supported orthotropic plates with linearly varying edge stress values of k_o

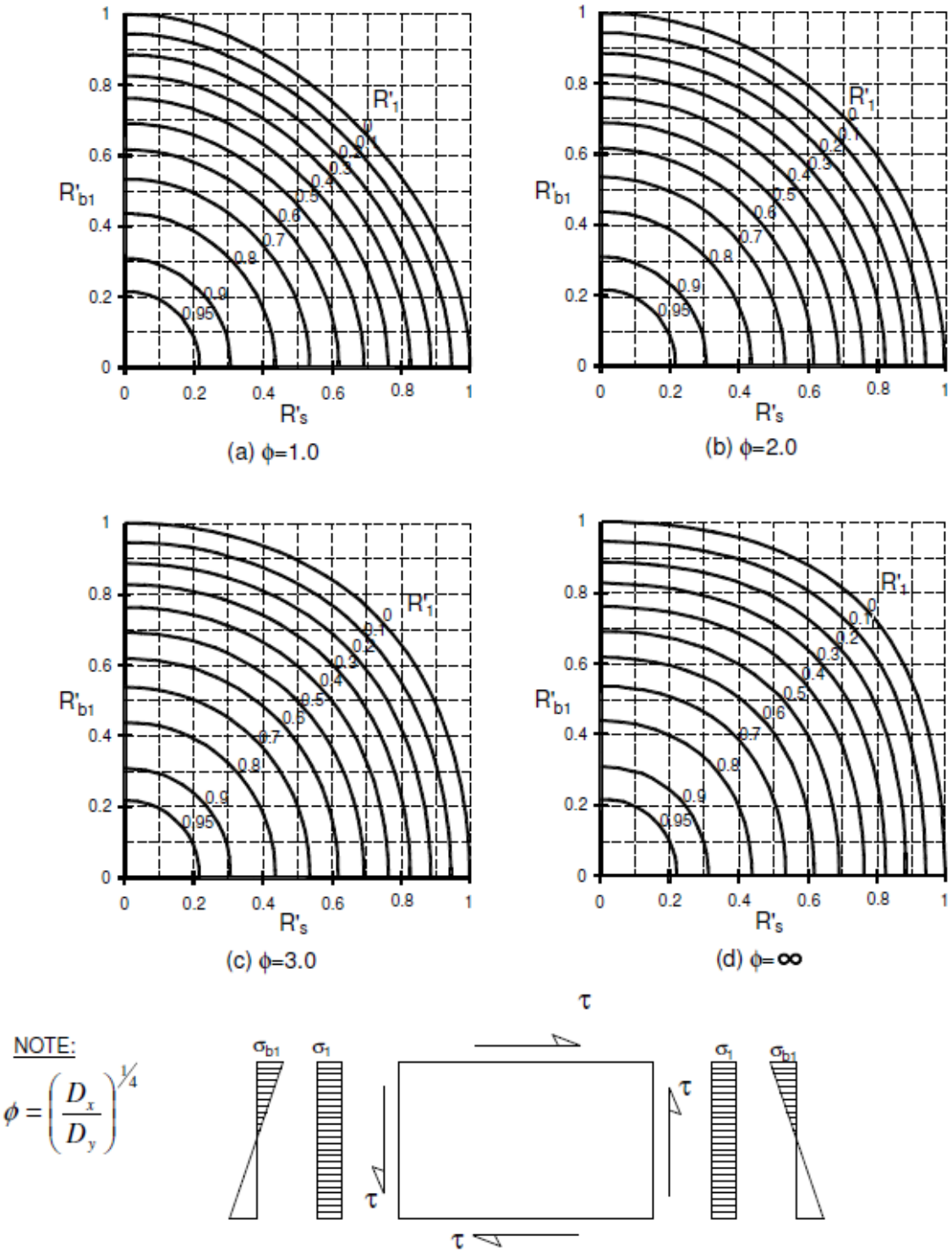

Figure N6A: Interaction curves for simply supported stiffened plates under combined longitudinal compression/bending and shear

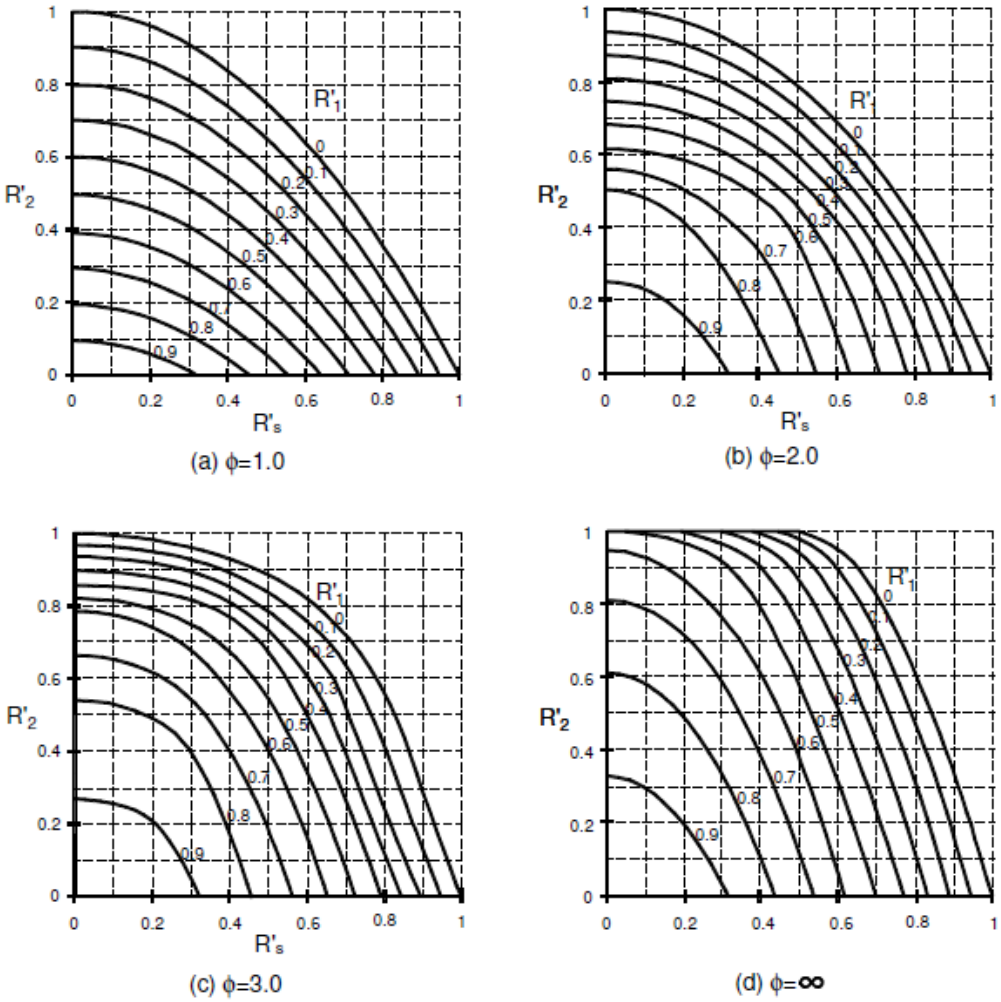

NOTE:

$$\phi = \left(\frac{D_x}{D_y}\right)^{1/4}$$

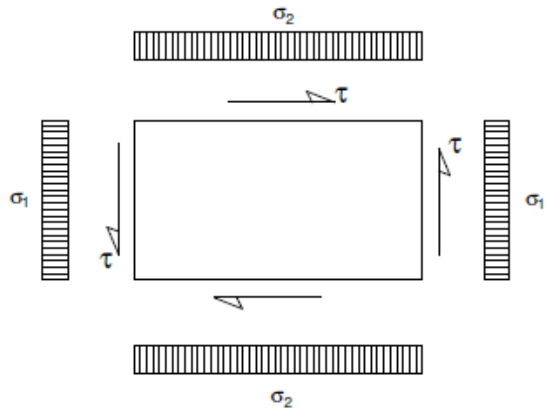

Figure N6B: Interaction curves for simply supported stiffened plates under combined longitudinal compression transverse compression and shear

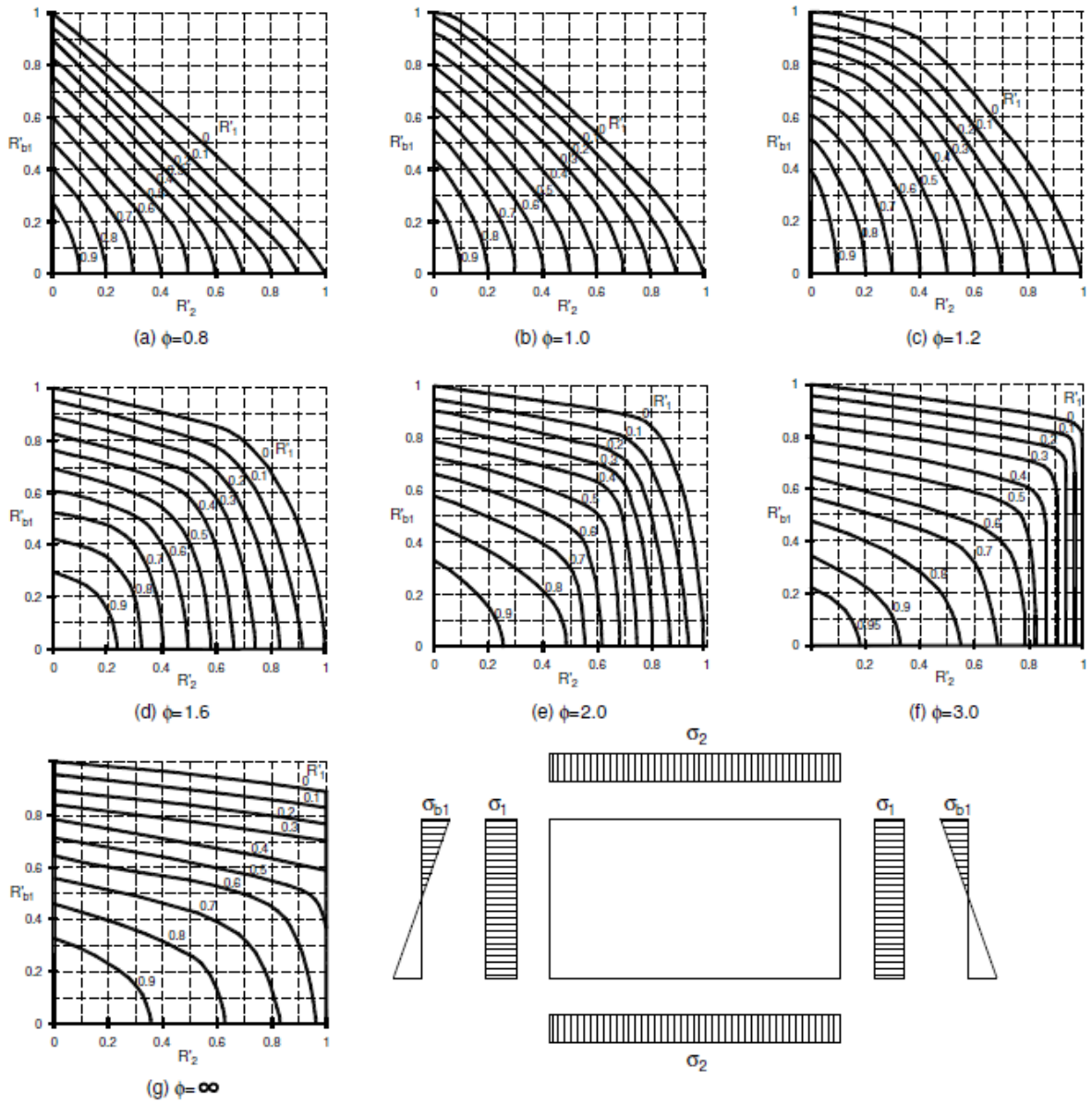

NOTE:

$$\phi = \left(\frac{D_x}{D_y}\right)^{1/4}$$

Figure N6C; Interaction curves for simply supported stiffened plates under combined biaxial – compression and longitudinal – bending

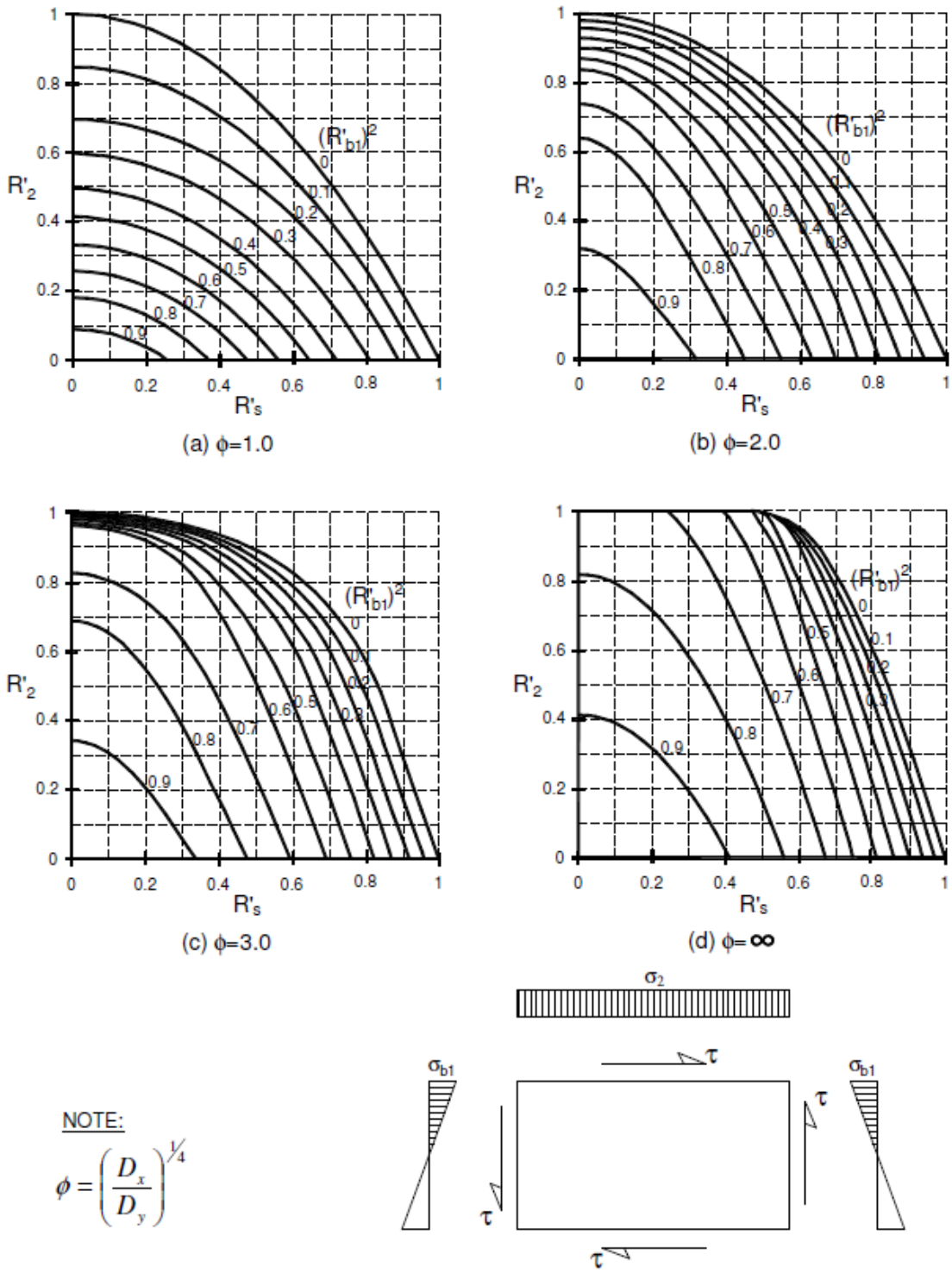

Figure N6D: Interaction curves for simply supported stiffened plates under combined transverse compression, bending and shear

USE OF INTERATION CURVES WHEN ONE OF THE APPLIED STRESSES IS TENSILE

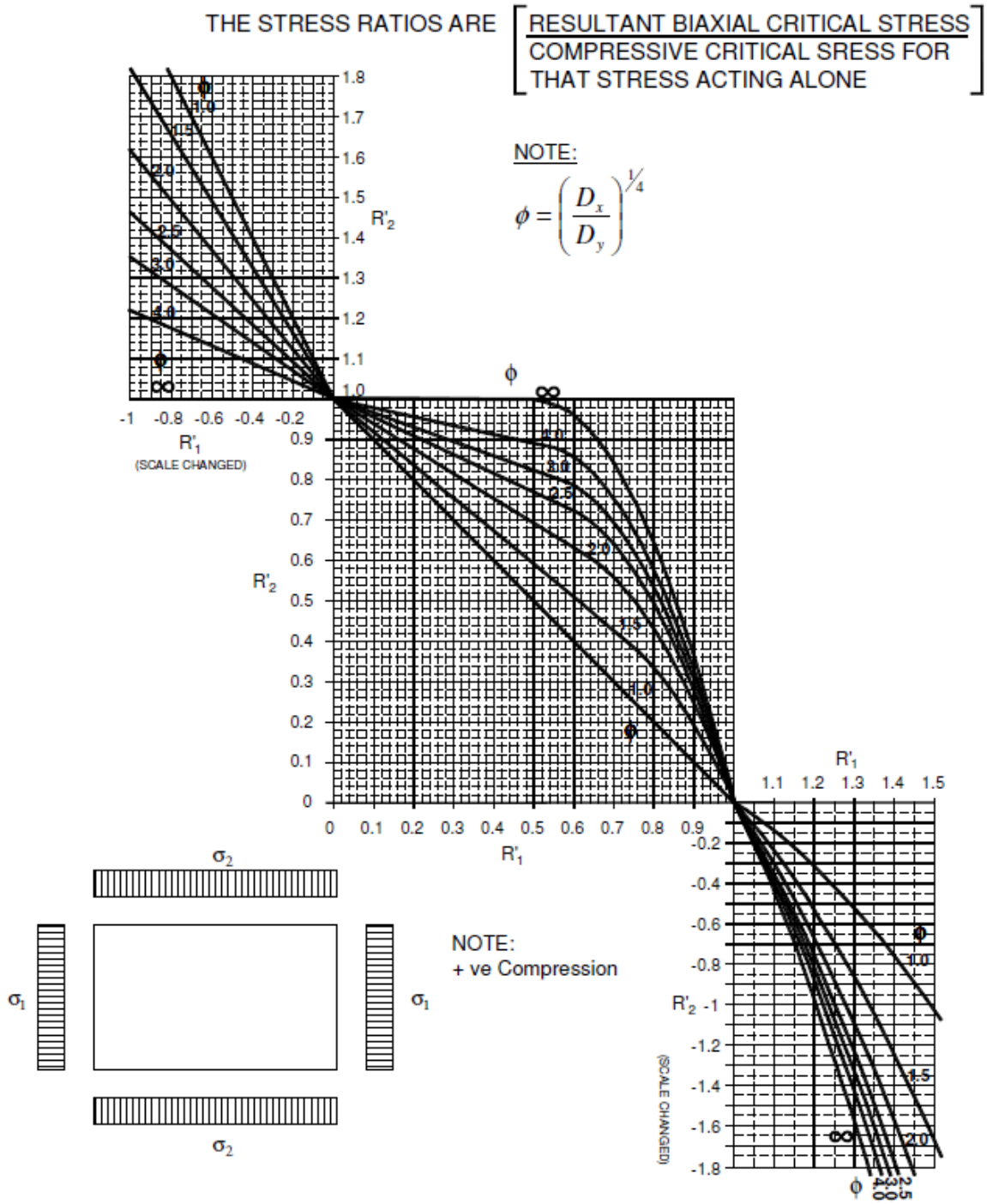

Figure N6E: Interaction curves for simply supported stiffened plates under biaxial stresses

Add new ***Annex P***

Annex P (Informative)

Effective width coefficients unrestrained in plane along their longitudinal edges

This Annex gives the basis for Figures 5A and 5B in 9.10.2.2 which may be used for calculating the coefficients for unrestrained plates with any out-of-plane deformation Δ_x measured after welding in accordance with BS 5400-6 with or without welding residual stress.

Values of K_c' and σ_a'/σ_{ye} may be derived from the following equations:

$$\frac{\sigma_a'}{\sigma_{ye}} = \frac{2088}{\lambda^2}\left[\left(1-\frac{1}{m}\right)+0.34\left(\frac{\Delta_0}{t_f}\right)^2\left(m^2-1\right)\right]-\frac{\sigma_R}{\sigma_{ye}} \qquad (1)$$

where

$$\lambda = \frac{b}{t_f}\sqrt{\frac{\sigma_{ye}}{355}}$$

σ_R = average welding residual stress on gross plate area taken as 0.1 σ_{ye} in Figures 5A and 5B
σ_a' = average axial stress on the section using a plate effective width coefficient K_C'

and Δ_o is obtained from:

$$\left(\frac{\Delta_o}{t_f}\right)^2+2.94\left(\frac{\Delta_o}{\Delta_x}\right)-\left(\frac{\Delta_o}{t_f}\right)^2 \quad -2.94+\frac{\lambda^2}{710}\frac{\sigma_R}{\sigma_{ye}}=0 \qquad \textbf{(2)}$$

NOTE: $\frac{\Delta_x}{t_f}$ *is taken as* $\frac{\lambda}{165}$ in Figures 5A and 5B

Values $\frac{\Delta_o}{t_f}$ may be obtained from the quadratic equation **(2)**

and m derived from solution of equation (1) for assumed values of σ_a'/σ_{ye}

The corresponding values of K_c' may then be calculated from equation (3). The process is iterated until K_c' corresponds to the value associated with the calculated value of σ_a' on Fig 5A.

$$K'c = \frac{\left(1-\frac{1}{m}\right)+0.34\left(\frac{\Delta_0}{t_f}\right)^2\left(m^2-1\right)-\frac{\lambda^2\sigma_R}{2088\sigma_{ye}}}{\left(1-\frac{1}{m}\right)+0.34\left(\frac{\Delta_0}{t_f}\right)^2\left(2m^2-m_r^2-1\right)-\frac{\lambda^2\sigma_R}{2088\sigma_{ye}}} \qquad \textbf{(3)}$$

In which:

$$m_r = \frac{\Delta_x}{\Delta_o}$$

Values of K_c" and σ_a'/σ_{ye} may similarly be derived from the following equations:

σ_a'/σ_{ye} is as given in equation (1)

$$K_c'' = \frac{1 + 0.68\left(\frac{\Delta_0}{t_f}\right)^2 m^3}{1 + 1.36\left(\frac{\Delta_0}{t_f}\right)^2 m^3} \qquad \textbf{(4)}$$

σ_{ye} is as defined in **9.10.2.3**

σ_{ye} is as defined in **9.10.2.3**

NOTE: For most practical cases of girder flanges, i.e. with negligible shear, the procedure may be simplified by taking σ_{ye} as σ_{yf}, where σ_{yf} is the nominal stress of the flange plate.

Add new ***Annex S***

Annex S (Normative)

Shape Limitations – assessment

S.1 Introduction

A method of determining 'lower yield stress' σ_{ys} of stiffeners for use in subsequent strength calculations, as specified in **9.3.1**, is provided.

NOTE: This method does not give a 'lower yield stress' σ_y of the plate to which the stiffener is attached. While the plate yield is significant in determining limiting proportions in some of the individual sub-clauses of **9.3**, it is not relevant to this Annex.

S.2 Stiffeners

S.2.1 General

The basic method involves determining the critical stress of the stiffener, and then carrying out a standard 'Perry' type interaction between this and the yield stress of the stiffener, taking into account the deformations of the stiffener. The expression used is:

$$\sigma_{ys} = 0.5\left[\left[\sigma_0 + \left(1 + \frac{\eta_{cr} D}{\sigma_{cr}}\right)\sigma_{cr}\right] - \sqrt{\left[\sigma_0 + \left(1 + \frac{\eta_{cr} D}{\sigma_{cr}}\right)\sigma_{cr}\right]^2 - 4\sigma_0\sigma_{cr}}\right]$$

Where σ_{ys} is the 'lower yield stress' to be used in subsequent strength calculations
σ_0 is the yield stress of the stiffener as defined in **6.2.1**
η_{cr} the imperfection parameter
σ_{cr} the critical stress of the stiffener

The method of calculating σ_{cr} is given for various shapes of open stiffeners in the following sections.

The value of η_{cr} may be taken as:

$$\eta_{cr} = 1.2\frac{\pi^2 \Delta_{SYE} a_y}{l_s^2}$$

Where

Δ_{SYE} is the lateral departure from straightness of the tip of the outstand appropriate to the half wavelength of buckling, ls
a_y is the greatest distance from the centroid of the stiffener alone to the extreme fibre of the outstand (see Figure S.3)

Where fabrication has been in accordance with BS 5400-6 in which the measured or specified tolerance is Δ_{Sy} related to a gauge length G taken as the lesser of 2b or L, Δ_{SYE} may be conservatively be taken as:

$$\Delta_{SYE} = \frac{\Delta_{Sy}}{\left\{1 - \sin\frac{\pi}{2}\left(1 - \frac{G}{l_s}\right)\right\}}$$

With l_s conservatively taken as L,

where L is the length between transverse supports to the stiffener.

When G is less than l_s, Δ_{SYE} should be more accurately taken as follows using l_s as calculated in the relevant sections of **S2.2**, **S2.3**, **S2.4**:

$$\Delta_{SYE} = \frac{\Delta_{Sy}}{\left\{1 - \sin\frac{\pi}{2}\left(1 - \frac{G}{l_s}\right)\right\}}$$

When G is greater than l_s, Δ_{SYE} should be more accurately taken as:

$$\Delta_{SYE} = \Delta_{Sy}\left\{1 - \sin\frac{\pi}{2}\left(1 - \frac{G}{l_s}\right)\right\}$$

In which G is the lesser of 2b or L.

S.2.2 Flat Stiffeners (Clause 9.3.4.1.2)

$$\sigma_{cr} = k\frac{\pi^2 E}{12\left(1-\nu^2\right)}\left(\frac{t_s}{h_s}\right)^2$$

σ_{cr} should be taken as:

Where k is a factor depending on the degree of restraint given by the parent Plate to the connected edge of the stiffener, and is derived from Figure **S.2** according to the value ε given by:

$$\varepsilon = 4\left(\frac{t}{t_s}\right)^3 \frac{h_s}{b}\alpha$$

NOTE 1: when α = 0 (see below), k tends to 0.43 and l_s/h_s tends to ∞, i.e. l_s tends to L.

t_s, and h_s are defined in **9.3.1**

t is the thickness of the parent plate
b is the spacing of longitudinal stiffeners

NOTE 2: Where the longitudinal stiffeners are unequally spaced b may be taken as the mean of the spacing on either side of the stiffener under consideration.

α is a factor to allow for the loss of effectiveness of plate under compressive stress, and is given by:

$$\alpha = 1 - \frac{\sigma_{p1}}{\sigma_{pcr}}\left(\frac{2}{\left(\frac{l_s}{b}\right)+\left(\frac{b}{l_s}\right)}\right)^2 - \frac{\sigma_{p2}}{\sigma_{pcr}}\left(\frac{2}{\left(1+\frac{b^2}{l_s^2}\right)}\right)^2$$

but not less than zero or greater than one.

Where

σ_{p1} is the compressive stress in the parent plate on the direction of the stiffener;
σ_{p2} is the compressive stress in the parent plate normal to the stiffener;

$$\sigma_{pcr} = \frac{\pi^2 E}{3(1-\nu^2)}\left(\frac{t}{b}\right)^2$$

and l_s is related to k as shown in Figure S.1 but $l_s \leq L$.

NOTE 3: if $l_s \geq 3b$ α may be taken as:

$$1.0 - \left(\frac{2b}{l_s}\right)^2\left(\frac{\sigma_{p1}}{\sigma_{pcr}}\right) - 4\left(\frac{\sigma_{p2}}{\sigma_{pcr}}\right)$$

if $l_s \leq b$ α should be taken as:

$$\left[1.0 - \left(\frac{\sigma_{p1} + \sigma_{p2}}{\sigma_{pcr}}\right)\right]$$

NOTE 4: Where σ_{pcr} is low and combination of σ_{p1} and σ_{p2} is high such that α = zero, a higher value of α (or σ_{cr}) may be derived from first principles or from tests.

Hence, the procedure is iterative, as follows:

i. Guess a value of k (between 0.43 and 1.28 which represent simply supported edges and fully fixed long edge respectively)
ii. Determine $\boldsymbol{l_s}$ from Figure S.1 (but see NOTE 1)
iii. Determine α from the expression above (but see NOTE 4)
iv. Determine ε from the expression above
v. Determine k from Figure S.2 (but see NOTE 1)
vi. Correct the initial guess for k and repeat as necessary until calculated k is sufficiently close to the original guess, and the derive σ_{cr}

S.2.3 Bulb flat Stiffeners (clause 9.3.4.1.3)

(a) A lower bound value for σcr may be found by assuming the edge is simply supported, in which case:

$$\sigma_{cr} = \frac{1}{A_s(r_X^2 + r_Y^2)}\left(GJ + \frac{\pi^2 E C_W}{L^2}\right)$$

where

r_X, r_Y	are the radii of gyration of the stiffener about XX, YY axes drawn through the line of attachment (see Figure S.3)
A_s	is the area of section of the stiffener
GJ	is the torsional rigidity of the stiffener
C_w	is the warping constant of the stiffener about the line of attachment
L	is the length between transverse supports to the stiffener

The above properties relate to an equivalent angle section in which the flange outstand is equal to the bulb outstand. The thickness of the equivalent flange is such that the flange outstand has an area equal to the area of the bulb outstand AB (Figure S.3) and hence:

$$C_W = \frac{1.1B^3H^2t_f}{3}\left(\frac{\frac{B^3t_f}{3H^2} + Bt_f + \frac{Ht_s}{3}}{Bt_f + Ht_s}\right)$$

$$J = \frac{Ht_s^3}{3} + \frac{Bt_f^3}{3}\left(1 - 0.63\frac{t_f}{B}\right)$$

(b) Alternatively, restraint of the stiffener against rotation by the parent plate σcr may be allowed for by deriving σ_{ct} as follows:

$$\sigma_{cr} = \frac{1}{A_s r_0^2}\left[GJ + \frac{\pi^2 EC_W}{l_s^2} + \frac{l_s^2\beta}{\pi^2}\right]$$

where the half wavelength of buckling l_s is given by:

$$l_s = \pi\left(\frac{EC_W}{\beta}\right)^{\frac{1}{4}}, \text{ but} \le L$$

and where the polar moment of inertia about the point of attachment, r_0, is given by:

$$r_0 = \sqrt{r_X^2 + r_Y^2}$$

and where the plate torsional restraint stiffness, β, is give by:

$$\beta = \frac{E}{(1-\nu^2)\left[\frac{3b}{\alpha t^3} + \frac{4H}{t_s^3}\right]}$$

A_s, r_X, r_Y, GJ, C_W and L are	all as defined in (a) above
H, t_s	are all as defined in Figure S.3
α	is as defined in **S.2.2** (see NOTES 3 and 4 in **S.2.2**)
b	is the distance between equally spaced stiffeners (see NOTE 2 in **S.2.2**)
t	is the thickness of parent plate

Hence, the procedure to determine σ_{cr} is iterative, similar to that for flat stiffeners

i. Guess a value of l_s (try l_s = 5H)
ii. Check $l_s \leq$ L (see NOTE 5 below)
iii. Determine α from an expression given in **S.2.2** (but see NOTE 4)
iv. Determine β from expression above
v. Determine l_s from expression above
vi. Correct the initial value of l_s, until convergence is obtained

σ_{cr} is then derived using the converged values of the parameters.

NOTE 5: This method of allowing for the restraint to the long edge is not satisfactory for the zero or very small restraints (i.e. for α and for β small enough to imply the preferred half wavelength of buckling l_s > L). In such cases the lower bound to σ_{cr} is given by the equation for the simply supported case in (a) above, i.e. putting l_s = L.

S.2.4 Angle Stiffeners (clause 9.3.4.1.4)

(a) A lower bound value for σcr may be found in the same way as for the equivalent angle representing the bulb lat, see Figure S.3. However, for an angle the expression for CW and J now becomes:

$$C_W = \frac{1.3B^3H^2t_f}{3}\left(\frac{\frac{B^3t_f}{3H^2} + Bt_f + \frac{Ht_s}{3}}{Bt_f + Ht_s}\right)$$

$$J = \frac{Ht_s^3}{3} + \frac{Bt_f^3}{3}$$

(b) Alternatively, allowance for restraint to the attached edge may be made in a similar iterative manner as for bulb flats, in **S.2.3(b).**

All parameters are as defined in **S.2.2**, **S.2.3** and Figure S.3 as relevant.

S.2.5 Tee stiffeners (Clause 9.3.4.1.5)

(a) A lower bound value for σ_{cr} may be found as for bulb flats and angle sections, but taking:

$$C_W = \frac{1.1B^3H^2t_f}{12}\left(\frac{\frac{B^3t_f}{12H^2} + Bt_f + \frac{Ht_s}{3}}{Bt_f + Ht_s}\right)$$

$$J = \frac{Ht_s^3}{3} + \frac{Bt_f^3}{3}$$

H, t_f, t_s and B are defined in Figure S.3.

(b) Alternatively, allowance for restraint to the attached edge may be made in a similar iterative manner as for bulb flats and angles, in **S.2.3.(b).**

All other parameters are as defined in **S.2.2**, **S.2.3** and Figure S.3 as relevant.

S.3 Circular Hollow Sections (clause 9.3.6)

A different approach should be used for circular hollow sections. The 'lower yield stress' σ_{ys} may be found from:

$$\frac{\sigma_{ys}}{\sigma_0} = \left(60\frac{t}{d}\right)^{\frac{1}{2}}, \text{ but not greater than 1.}$$

NOTE: This expression is apparently in conflict with the limit in the Standard, since at d/t > 60 there is a reduction in strength irrespective of the value of σ_y. However, the limit in the standard may be used, and the above formula only applied when non-compliance occurs. It gives a good lower bound fit to experimental results. Tests have shown that the expression for σ_{ys}/σ_0 is virtually independent of the value of σ_y, at larger values of d/t. In any case, it is unlikely that circular hollow sections used in bridge structures will fail to comply with the requirements of the standard.

S.4 Closed Stiffeners (Clause 9.3.4.2)

Closed stiffeners are not prone to lateral torsional buckling, but their elements may be prone to plate panel buckling. Thus, an appropriate limiting stress may be derived by application of **9.4.2.4** or other methods such that a lower value of σ_{ys} is derived in accordance with **9.3.1** for closed stiffeners not complying with **9.3.4.2**.

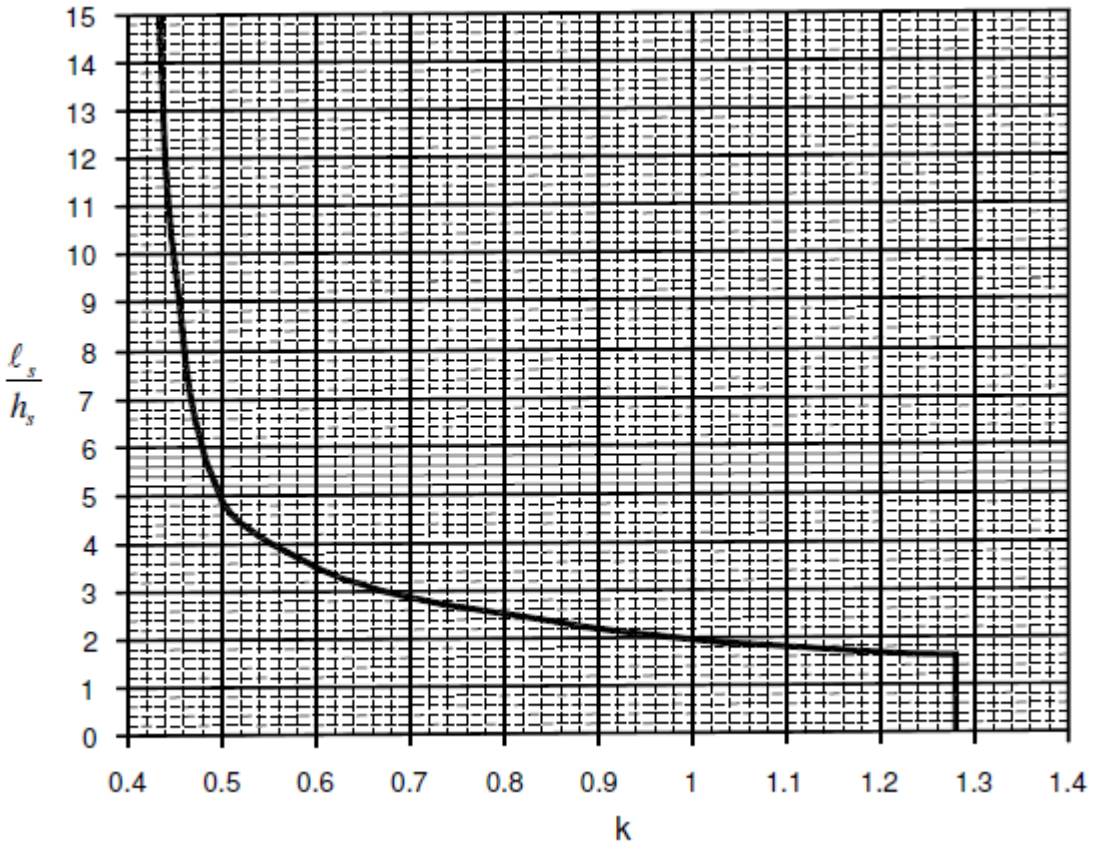

Figure S.1

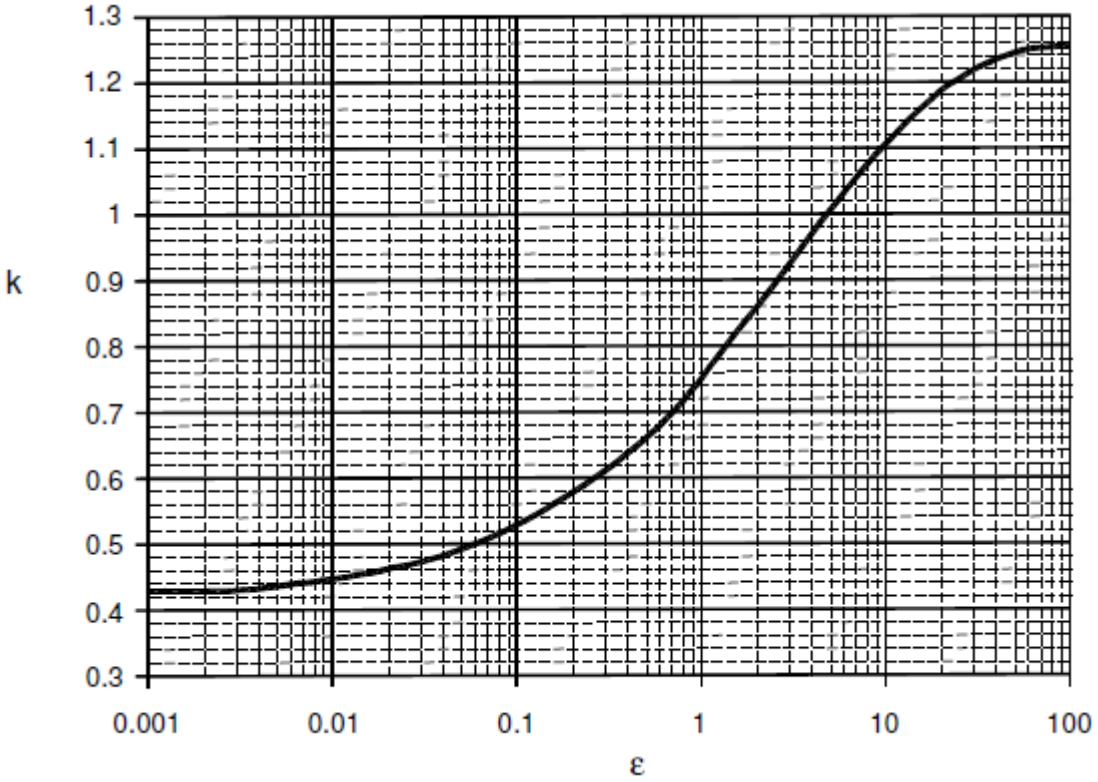

Figure S.2

Note: In Figure S.3, note Y-Y is axis of point of attachment (taken as centre of the attached leg) but y-y is centroidal axis of the stiffner alone

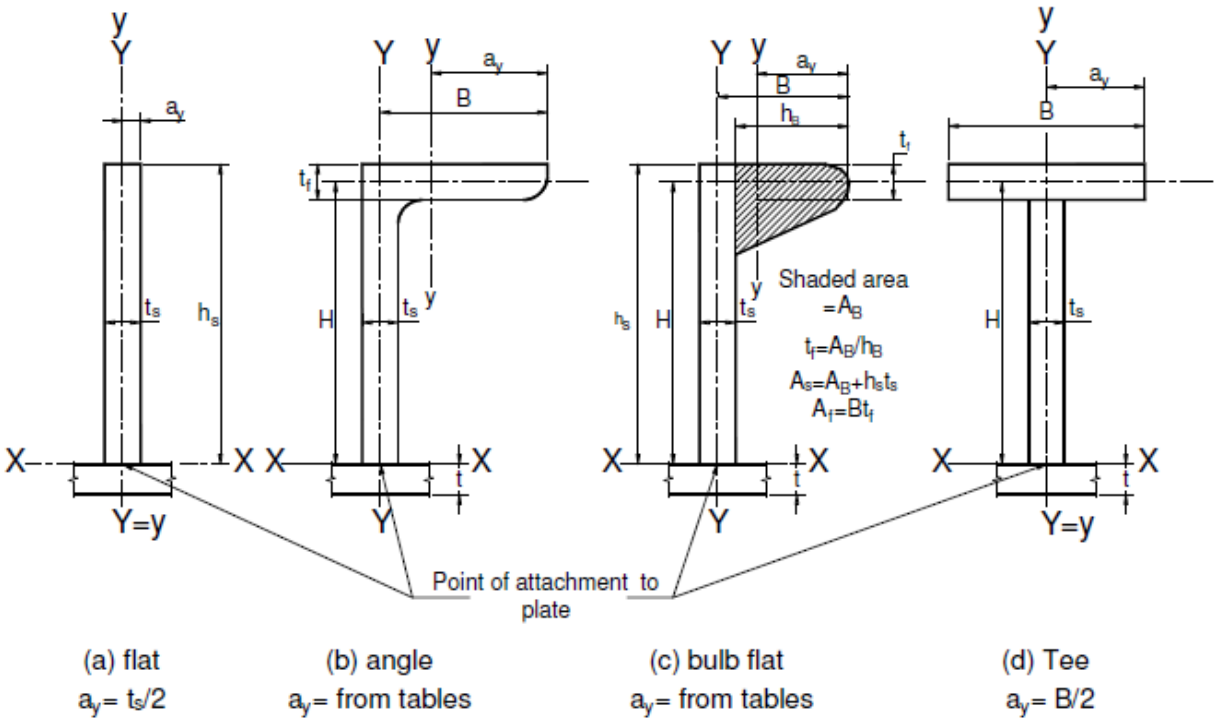

Figure S.3

Add new ***Annex T***

Annex T (Informative)

Derivation of buckling co-efficients for web panels

T.1 General

A method is provided for determining the buckling coefficients and hence limiting stresses and their interaction, taking into account the level of imperfections. The basis is the well established use of elasto-plastic large deflection computer methods and checks with nominal imperfections show satisfactory agreement.

The calculation involves the determination of the individual buckling coefficients K_1, K_q, K_b and K_c, and the modification of them to take into account the actual level of imperfection by means of factors $k_{\Delta 1}$, $k_{\Delta q}$, $k_{\Delta b}$ and $k_{\Delta c}$.

Many of the values are given in terms of β, a non-dimensional slenderness of the plate panel, where

$$\beta = \frac{b}{t}\sqrt{\frac{\sigma_y}{E}}$$

and $ó_y$ is the yield stress of the material. Polynomials in β have been derived which are 'best-fit' curves to results obtained from large deflection elasto-plastic analysis.

It is assumed that in the longitudinal direction (direction 1) the length of the panel a is equal to or greater than its width b; if this is not the case, the 1 and 2 directions should be reversed. The basic buckling coefficients were derived using a nominal imperfection w_{os} given by

$$w_{os} = 0.145\beta t = \frac{b}{165}\sqrt{\frac{\sigma_y}{355}}$$

This is in sufficiently close agreement to the BS 5400-6 requirements and hence may be taken as the nominal imperfection.

T.2 Limiting longitudinal stress σ_{ul}

The longitudinal coefficient K_1 for nominal imperfection is given by

$$K_1 = 0.23 + \frac{1.16}{\beta} - \frac{0.48}{\beta^2} + \frac{0.09}{\beta^3}$$

and the limiting stress, σ_{u1} by $\sigma_{u1} = k_{\Delta 1}K_1\sigma_y$

where the imperfection sensitivity parameter $k_{\Delta 1}$ is determined from Figure T.3A which relates $k_{\Delta 1}$ to Ω, the ratio of the actual imperfection to the nominal.

T.3 Limiting shear stress τ_u

The shear buckling coefficient is determined from the curves of Figure 22(b) of the Code, and the limiting stress τ_u given by

$$\tau_u = k_{\Delta q}K_q\frac{\sigma_y}{\sqrt{3}} \quad \text{, but not greater than } \sigma_y/\sqrt{3}$$

where the imperfection sensitivity parameter $k_{\Delta q}$ is determined from Figure T.3B.

T.4 Limiting bending stress σ_b

Explicit values of the coefficient K_b and the factor $k_{\Delta b}$ are not yet available. Bending may be allowed for by adding half the peak compressive bending stress to the direct stress, σ_1

T.5 Limiting transverse stress σu2

To determine the transverse limiting stress σ_{u2} it is necessary to determine K_c given by

$$K_c = \frac{0.025}{\beta} + \frac{0.641}{\beta^2} - \frac{0.188}{\beta^3}$$

and the limiting stress $\sigma_{uc} = k_{\Delta C} K_C \sigma_y$

where the imperfection sensitivity parameter $k_{\Delta C}$ is determined from Figure T.3C.

Then σ_{u2} is given by

$$\sigma_{u2} = \sigma_{uc} + \frac{b}{a}(\sigma_{u1} - \sigma_{uc})$$

where σ_{u1} is determined as in T.2.

T.6 Interaction of limiting stresses

To evaluate this interaction, two non-dimensional parameters are required:

(a) η given by

$$\eta = \left(\frac{K_1}{K_{biax}}\right)^2 - 2$$

where K_1 is derived in **T.2**.

and $$K_{biax} = \frac{1.27}{\beta} - \frac{0.89}{\beta^2} + \frac{0.30}{\beta^3}$$

(b) ζ, given by $$\zeta = \left[1 - \left(\frac{\tau}{\tau_u}\right)^2\right]^{\frac{1}{n}}$$

where τ is the shear stress in the panel
τ_u is derived in **T.3**

n is derived as follows:

Calculate $$\beta_{cr} = \sqrt{8.34 + 6.25\left(\frac{b}{a}\right)^2}$$

then, if $\frac{\beta}{\beta_{cr}} \leq 1.0, n = 2 - \frac{\beta}{\beta_{cr}}$

or, if $\frac{\beta}{\beta_{cr}} > 1.0, n = 1$

Then the interaction is given by

$$\sigma_1^2 + \eta\ \sigma_1\ \sigma_{2e} + \sigma_{2e}^2 \leq \left(\frac{\zeta \sigma_{u1}}{\gamma_m \gamma_{f3}}\right)^2$$

where

σ_1 is the longitudinal stress in the panel, to be taken as zero if tensile.
σ_{u1} is the longitudinal limiting stress derived in **T.2**.
σ_{2e} is an equivalent transverse stress, derived as follows:

when $\sigma 2 \leq \zeta\ \sigma_{uc}$

when $\frac{a}{b} = 1$, $\sigma_{2e} = \sigma_2$;

when $\sigma_2 \leq \zeta\ \sigma_{uc}$

$$\sigma_{2e} = \zeta\ \sigma_{uc}\left(1 - \frac{a}{b}\right) + \sigma_2$$

where σ_2 is the transverse stress in the panel; to be taken as zero if tensile.
σ_{uc} is derived in **T.5**.

In all cases, the above buckling interaction is truncated by the Von Mises ellipse:

where σ_1 and σ_2 are the longitudinal and transverse stresses in the panel, to be taken as positive if compressive and negative if tensile.

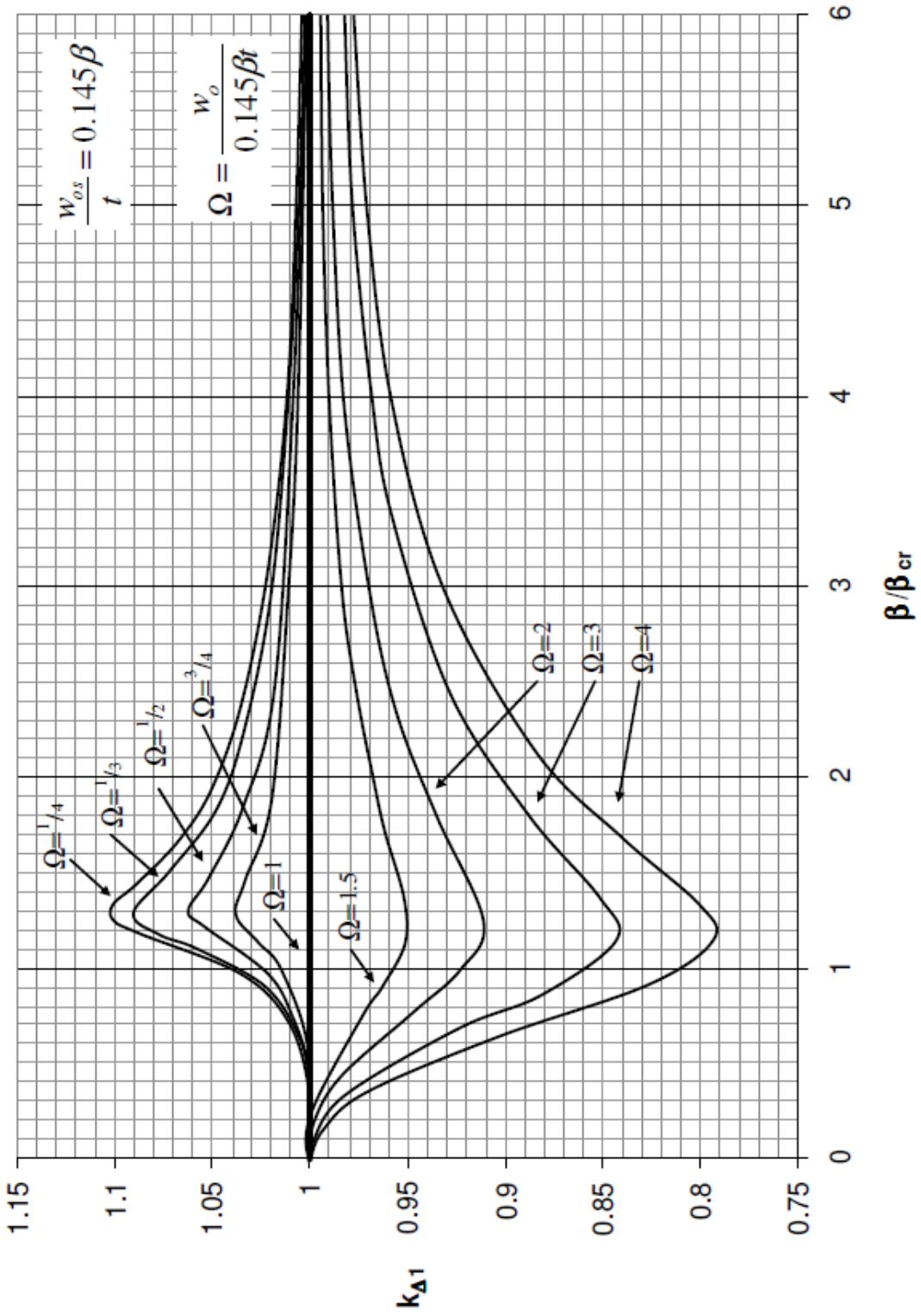

Figure T.3A: Imperfection Sensitivity

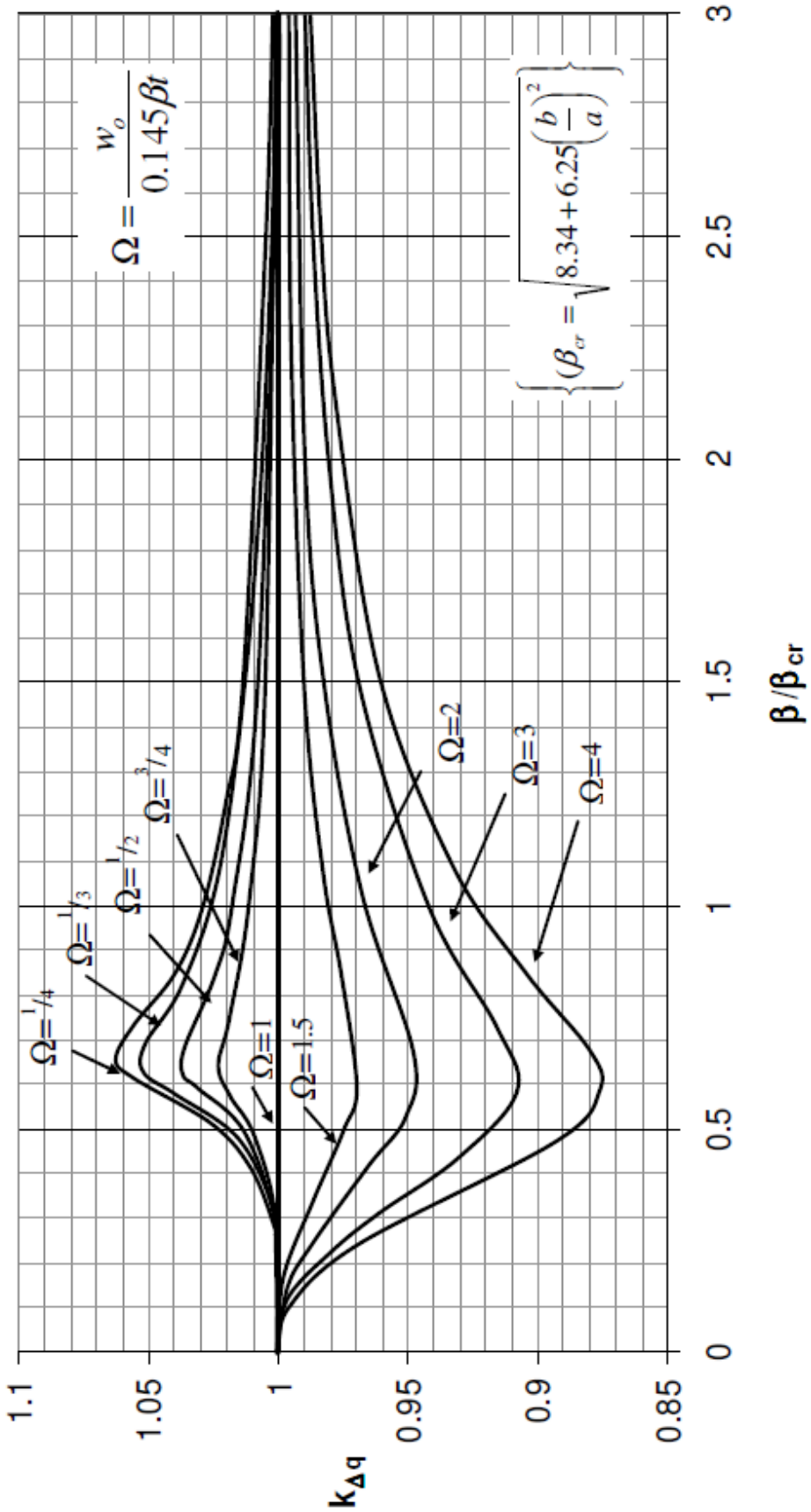

Figure T.3B: Imperfection Sensitivity

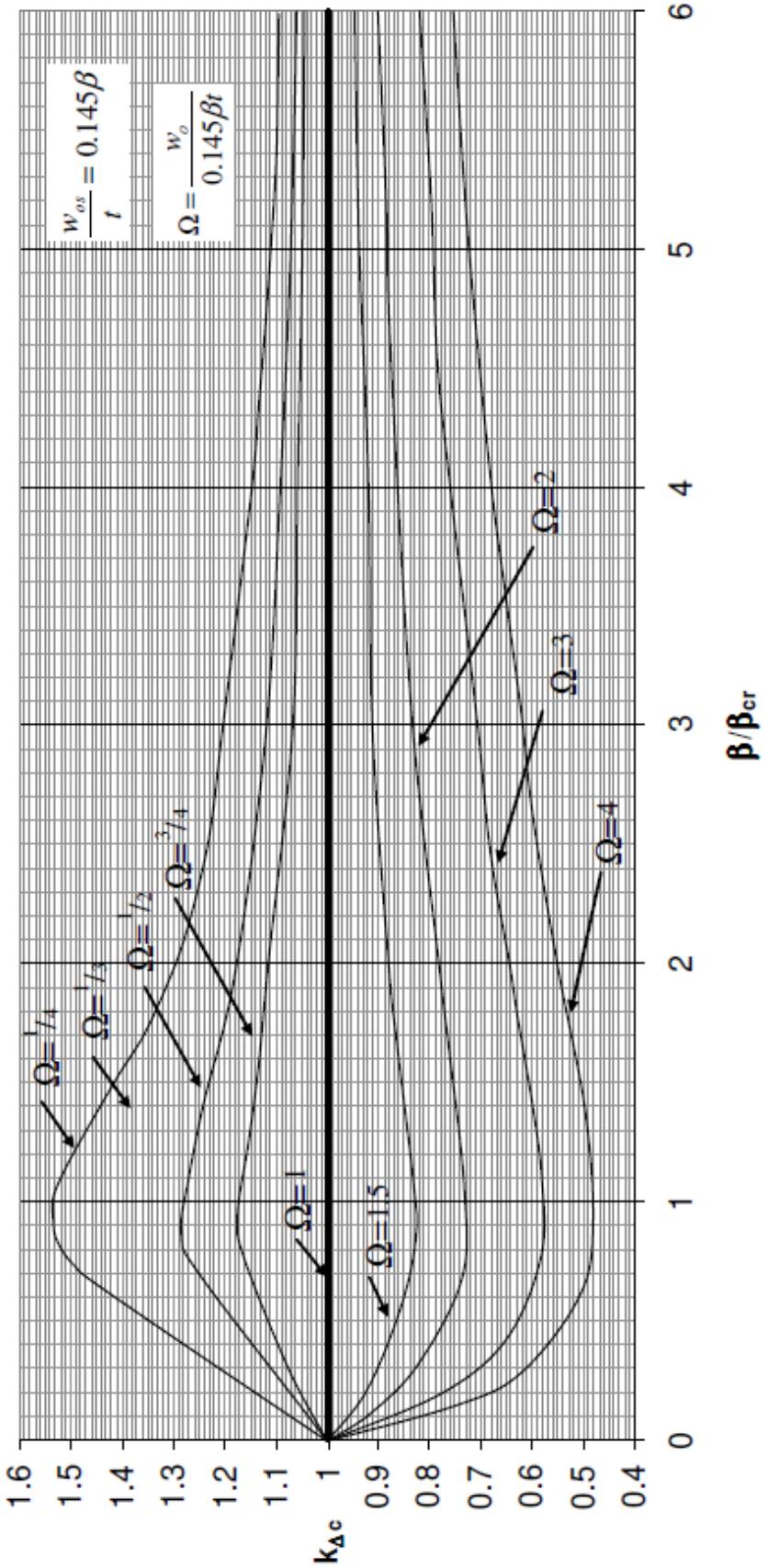

Figure T.3C: Imperfection Sensitivity

Add new ***Annex X***

Annex X (Informative)

Assessment of risk levels for notch toughness

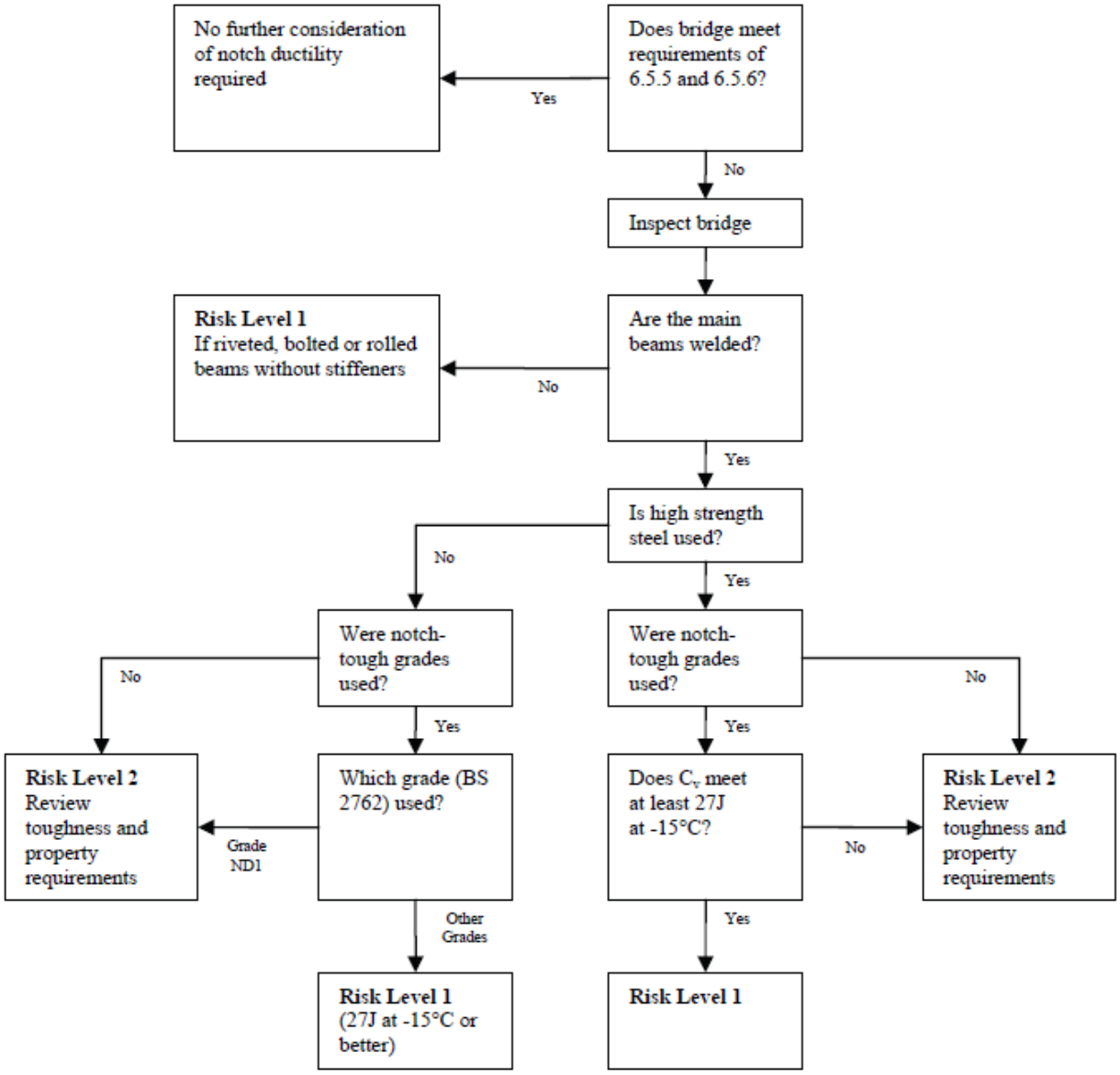

Figure X1: Identification of risk level due to low toughness 2 categories

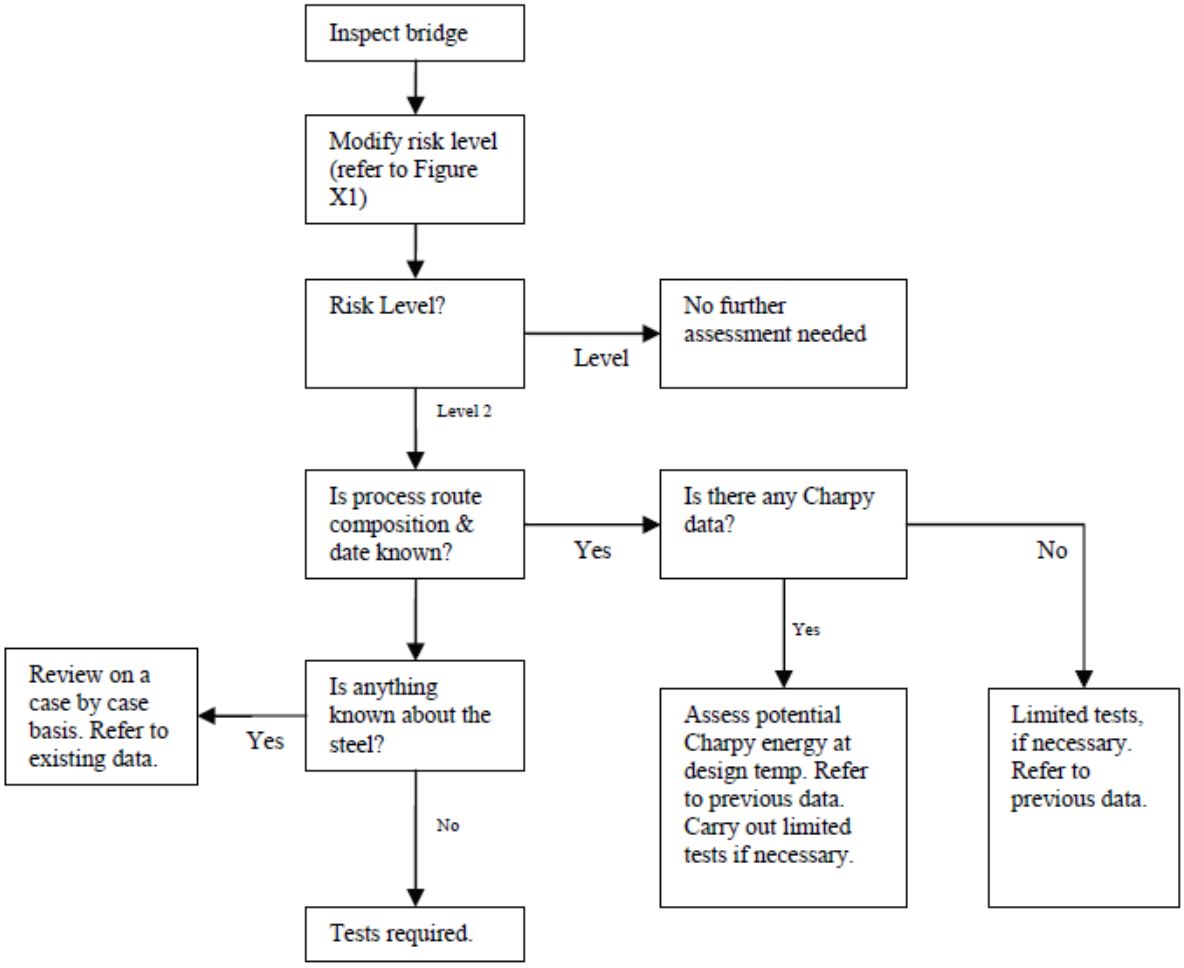

Figure X.2: Assessment of risk level 2 categories

Add new ***Annex Z***

Annex Z Bibliography

Relevant to clause 4

4.3.1 CONSTRUCTION INDUSTRY RESEARCH and INFORMATION ASSOCIATION
The rationalisation of safety and serviceability factors in Structural codes. Report 63
CIRIA, London, 1977

4.3.2 FLINT & NEILL PARTNERSHIP and IMPERIAL COLLEGE
Derivation of safety factors for BS 5400 Part 3- Final report to the Department of Transport, August 1980

4.3.3 FLINT, A. R., SMITH, B. W., BAKER, M.J. and MANNERS,W. The derivation of safety factors for design of highway bridges. The design of steel bridges. Proceedings of the conference on the new code for the design and construction of steel bridges, Cardiff 1980, Granada Publishing, 1981

4.3.4 THOFT-CHRISTENSEN, P. and BAKER, N. J.
Structural reliability theory and its application Springer-Verlag, 1982

4.3.5 BENJAMIN, J.R. and CORNELL, C.A. Probability, Statistics and Decision for Civil Engineers.
McGraw-Hill, 1970

4.3.6 BAKER, M.J. Variability on the strength of structural steels-a study in structural safety. Part 1: Material variability. CIRIA Technical NOTE 44, 1972

4.3.7 BAKER, M.J. Variability on the strength of structural steels-a study in structural safety. Part 2: Proposals for statistical acceptance criteria for structural steels. CIRIA Technical NOTE 47, 1973

Relevant to clause 5

Relevant to clause 6

6.0.1 BRITISH STANDARDS INSTITUTION
BS EN 10025-2: Hot rolled products structural steels. Technical delivery conditions for non-alloy structural steels
BSI, London, 2004

6.0.2 DEPARTMENT FOR TRANSPORT
Highway safety and traffic Departmental standard BD 13/06 Design of steel bridges
Use of BS 5400: Part 3: 2000
Crown copyright, 2006

6.2.1 COMMISSION OF THE EUROPEAN COMMUNITIES
Eurocode No 3: Design of steel structures, 2005

6.2.2 BRITISH STANDARDS INSTITUTION
BS ISO 16269-6: 2005 Statistical interpretation of data. Determination of statistical tolerance intervals

6.2.3 See 4.3.6 and 4.3.7 above

6.2.4 BATES, W
Historical Structural Steel Handbook BCSA, London 1984

6.3.1 Hardness testing and ultimate tensile strength ASTM A 370
American Society for Testing Materials

6.4.1 BRITISH STANDARDS INSTITUTION
BS EN ISO 2566-1: 1999: Steel. Conversion of elongation values. Carbon and low alloy steels BSI, London, 1999

6.5.1 DIETER, G. E.
Mechanical metallurgy McGraw Hill, 1984

6.5.2 BURDEKIN, F. M. et al.
Brittle fracture in steel bridges
Transport and Road Research Laboratory, Department of Transport Contractor Report 71, 1988

6.5.2 PETERSEN, R. E.
Stress concentration factors
J. Wiley & Sons, New York, 1974

Relevant to clauses 7 and 8

8.1.1 HORNE, M. R.
Basic concepts in the design of webs
The design of steel bridges, Edt. K. C. Rockey and H.R. Evans, Granada Publishing 1981 pp 161-173

8.2.1 MOFFAT, K. R. AND DOWLING, P. J.
Shear lag in steel box girder bridges
The Structural Engineer, London, Vol 53, No 10, October 1975

8.2.2 OWLING, P. J., MOOLANI, F. M. AND FRIEZE, P. A.
The effect of shear lag on the ultimate strength of box girders
International Symposium on Steel Plated Structures, Crosby-Lockwood, 1977

8.5.1 DEPARTMENT FOR TRANSPORT
Inspection Manual for Highway Structures TSO, London 2007

8.8.1 Code of Practice for simply supported steel bridges Institution of Structural Engineers, 1949

Relevant to clause 9

9.5.1 CHATTERJEE, S.
Design of stiffened compression flanges in box and plate girders
The design of steel bridges, Edt. K. C. Rockey and H.R. Evans, Granada Publishing 1981 pp 281-301

9.5.2 DWIGHT, J. R. and LITTLE, G. H.
Stiffened steel compression flanges - a simpler approach The Structural Engineer, London, December 1976

9.5.3 HORNE, M. R.
Basic concepts in the design of webs
The design of steel bridges, Edt. K. C. Rockey and H.R. Evans, Granada Publishing, 1981 pp 161-173

9.5.4 HARDING, J. E., HOBBS, R. E. and NEAL, B. G.
The elasto-plastic analysis of imperfect square plates under in-plane loading Proceedings, Institution of Civil Engineers, London, Part 2, Vol 63, 1977

9.6.1 TIMOSHENKO, S. P. and GERE, J. M.
Theory of elastic stability, 2nd Edition McGraw Hill, 1961

9.6.2 BOSE, B.
The influence of torsional restraint stiffness at supports on the buckling strength of beams The Structural Engineer, London, Vol 60B, No 4, December 1982, pp 69-75

9.6.3 SCHMIDT, L. C.
Restraints against elastic lateral buckling Journal of Engineering Mechanics Division American Society of Civil Engineers
Vol 91, No EM6, December 1965, pp 1-10

9.6.4 WINTER, G.
Strength of slender beams
Transactions of the American Society of Civil Engineers paper 2232, June 1943, pp 1321-1358

9.6.5 NETHERCOT, D. A.
Design of beams and plate girders - treatment of overall and local flange buckling
The design of steel bridges, Edt. K. C. Rockey and H.R. Evans, Granada Publishing, pp 243-262

9.6.6 HETENYI, M.
Beams on elastic foundations University of Michigan Press, 1946

9.7.1 TRAHAIR, N. S. and WOOLCOCK, S. T.
Effects of major axis curvature on I-beam stability Journal of the Engineering Mechanics Division American Society of Civil Engineers
Vol 99, EMI, February 1973, pp 85-98

9.8.1 KERENSKY, O. A., FLINT, A. R. and BROWN, W.C.
The basis for design of beams and plate girders in the revised BS 153 Proceedings Institution of Civil Engineers, No 2, August 1956

9.9.1 FLINT, A. R.
The stability and strength of slender beams Engineer, 22 December 1950

9.9.2 BAKER, HORNE and HEYMAN
The Steel Skeleton, Vol 2 Cambridge University Press, 1956

9.9.3 PIPPARD and BAKER
The analysis of engineering structures Edward Arnold, 1957

9.10.1 CHATTERJEE, S
The design of modern steel bridges BSP Books, 1991

9.11.1 ROBERTS, T. M. and ROCKEY, K. C.
A mechanism solution for predicting the collapse loads of slender plate girders when subjected to in-plane patch loading.Proceedings, Institution of Civil Engineers, Part 2, March 1979

9.11.2 Review of experimental work on stiffened plates - Final report prepared for TRRL, DTp, by J P Kenny & Partners, March 1985

9.11.3 ROBERTS, T. M.

Slender plate girders subjected to edge loading
Proceedings, Institution of Civil Engineers, Vol 71, Part 2, September 1981

9.11.4 HARDING, J. E., HOBBS, R. E. and NEAL, B. G.
Ultimate load behaviour of plates under combined direct and shear in-plane loading International Symposium on Steel Plated Structures, Crosby-Lockwood, 1977

9.11.5 CHAPMAN, J. C., SMITH, C.S., DAVIDSON, P.C. and DOWLING, P.J.
Recent developments in the design of stiffened plate structures
Proceedings of the 2nd Conference on Advances in Marine Structures, Admiralty Research Establishment, Dunfermline 1991, pp 529-548

9.12.1 ROCKEY, K. C. and EVANS, H. R. (Edts)
The design of steel bridges, Granada Publishing, London, 1981

9.12.2 JEFFERS, E.
U-frame restraint against instability of steel beams in bridges
The Structural Engineer, London, Vol 68, No 18, 18 September 1990, pp 359-366

6.12.3 FLINT, A. R.
The influence of restraints on the stability of beams The Structural Engineer, September, 1954

9.15.1 Dtp (DOE)
Report of Investigation into Design of Crossframes, Bullen & Partners, May 1976

9.15.2 CHATTERJEE, S.
Design of stiffened compression flanges in box and plate girders
The design of steel bridges, Edt. K. C. Rockey and H.R. Evans, Granada Publishing 1981 pp 281-301

9.15.3 HORNE, M. R.
Structural Action in Steel Box Girders, CIRIA Guide No 3, April 1977

9.15.4 HORNE, M. R. and MERCHANT, W.
The stability of frames, Pergamon Press, 1965

Relevant to clause 10

10.8.1 KOENIGSBERGER, F.
Design and load carrying capacity of welded battened struts
Journ, Institution of Structural Engineers, Vol 34, June 1956, p 183

10.8.2 TIMOSHENKO, S.
Theory of elastic stability McGraw Hill, 1936

10.8.3 GIRKMANN, K.
Ausbeuten von Bindeblechen
Der Stahlbau, Vol 8, No 24, Nov 1936, p 189

10.9.1 As reference 10.8.2.

Relevant to clause 11

11.1 See reference 12.2.

Relevant to clauses 12 & 13

12.1 GOODEARL, K. A.
Trusses; Symposium on BS 5400, Part 3 Institution of Structural Engineers, 1980

12.2 GOODEARL, K. A.
Trusses and axially loaded members - new aspects of the design code; The Design of Steel Bridges, Granada Publishing, London, 1981

Relevant to clause 14

14.2.1 BRITISH STANDARDS INSTITUTION
BS 5400: Part 10: Steel, concrete and composite bridges - Code of practice for fatigue BSI, London, 1980

14.2.2 BRITISH STANDARDS INSTITUTION
BS EN 1011-1: 1998 Recommendations for welding of metallic materials. General guidance for arc welding BSI, London, 1998

14.2.3 BRITISH STANDARDS INSTITUTION
BS EN 1011-2: 2001 Recommendations for welding of metallic materials. Arc welding of ferritic steels BSI, London, 2001

14.3.1 COMMISSION OF THE EUROPEAN COMMUNITIES
IS EN 1993-1-1: 2005 Eurocode No 3: Design of steel structures Part 1: General rules and rules for buildings

14.3.2 KULAK, G. L., FISHER, J. W. and STRUIK, J. H. A.
Guide to design criteria for bolted and riveted joints 2nd edition
J. Wiley & Sons, New York, 1987

14.3.3 OWENS, G. W. and CHEAL, B. D.
Structural steelwork connections Butterworths, London, 1989

14.3.4 CHEAL, B. D.
Design guidance notes for friction grip bolted connections Technical Note 98, CIRIA, London, May 1980

14.3.5 DOUTY, R. T. and McGUIRE, W.
High strength bolted moment connections Journal ASCE, Vol 91, April 1965

14.5.1 BRITISH STANDARDS INSTITUTION
BS 3692: ISO metric precision hexagon bolts, screws and nuts. Specification BSI, London, 2001

14.5.2 BRITISH STANDARDS INSTITUTION
BS 5400: Part 6: 1999 Steel, concrete and composite bridges - specification for materials and workmanship, steel BSI, London, 1999

14.5.3 BRITISH STANDARDS INSTITUTION
BS 4604: Part 1: Specification for the use of high strength friction grip bolts in structural steelwork - metric series - general gradeBSI, London, 1970

14.5.4 BRITISH STANDARDS INSTITUTION
BS 4604: Part 2: Specification for the use of high strength friction grip bolts in structural steelwork - metric series - higher grade (parallel shank)
BSI, London, 1970

14.5.5 BRITISH STANDARDS INSTITUTION
BS 4395: Parts 1 to 3: Specification for high strength friction grip bolts and associated nuts and washers BSI, London, 1969

14.6.1 BRITISH STANDARDS INSTITUTION
BS 7910: 2005: Guide to methods for assessing the acceptability of flaws in metallic structures BSI, London, 2005

Relevant to clauses 15 and 16

15.2.1 HUNTER, A.
Arrol's Bridge and Structural Engineers Handbook 1920

Part 9

Bonneagar Iompair Éireann
Transport Infrastructure Ireland

Ionad Ghnó Gheata na Páirce,
Stráid Gheata na Páirce,
Baile Átha Cliath 8, Éire

Parkgate Business Centre,
Parkgate Street,
Dublin 8, Ireland

www.tii.ie

info@tii.ie

+353 (01) 646 3600

+353 (01) 646 3601