Bonneagar Iompair Éireann
Transport Infrastructure Ireland

TII Publications

GE PE DN CC OP AM RE

Portal and Cantilever Sign/Signal Gantries

DN-STR-03010
February 2017

DN Design

Standards

About TII

Transport Infrastructure Ireland (TII) is responsible for managing and improving the country's national road and light rail networks.

About TII Publications

TII maintains an online suite of technical publications, which is managed through the TII Publications website. The contents of TII Publications is clearly split into 'Standards' and 'Technical' documentation. All documentation for implementation on TII schemes is collectively referred to as TII Publications (Standards), and all other documentation within the system is collectively referred to as TII Publications (Technical).

Document Attributes

Each document within TII Publications has a range of attributes associated with it, which allows for efficient access and retrieval of the document from the website. These attributes are also contained on the inside cover of each current document, for reference.

TII Publication Title	*Portal and Cantilever Sign/Signal Gantries*
TII Publication Number	*DN-STR-03010*

Activity	*Design (DN)*		**Document Set**	*Standards*
Stream	*Structures (STR)*		**Publication Date**	*February 2017*
Document Number	*03010*		**Historical Reference**	**NRA BD 51**

TII Publications Website

This document is part of the TII publications system all of which is available free of charge at http://www.tiipublications.ie. For more information on the TII Publications system or to access further TII Publications documentation, please refer to the TII Publications website.

TII Authorisation and Contact Details

This document has been authorised by the Director of Professional Services, Transport Infrastructure Ireland. For any further guidance on the TII Publications system, please contact the following:

Contact: Standards and Research Section, Transport Infrastructure Ireland
Postal Address: Parkgate Business Centre, Parkgate Street, Dublin 8, D08 DK10
Telephone: +353 1 646 3600
Email: infoPUBS@tii.ie

TII Publications

Activity:	Design (DN)
Stream:	Structures (STR)
TII Publication Title:	Portal and Cantilever Sign/Signal Gantries
TII Publication Number:	DN-STR-03010
Publication Date:	February 2017
Set:	Standards

Contents

Updates to TII Publications resulting in changes to

Portal and Cantilever Sign/Signal Gantries DN-STR-03010

Date: February 2017

Amendment Details:

This Standard supersedes the version of DN-STR-03010 published in December 2014. The principle changes from the previous standard are as follows:

a) Items in relation to vehicle impact forces on gantry supports contained within DN-STR-03013 have been added to this document.

b) Reference to 4.5m setback has been removed.

c) Updates to reference new naming structure for TII Publications.

Contents Table

1. Introduction

1.1 Scope

This Standard covers the design of Portal and Cantilever Sign and Signal Gantries (see Appendix A Figures) and sets out their structural design requirements in accordance with Transport Infrastructure Ireland's (TII) requirements for the use of Eurocodes.

It is intended for use in designing permanent and temporary structures which wholly span or are partially cantilevered over the carriageway, hard shoulder and/or hard strip for the purpose of supporting large signs and/ or motorway type signals and/or message signs, such as, but not exclusively, the examples shown in Appendix A, but excluding cantilever or other traffic signal masts which are covered in DN-STR-03018 "Design of Support Structures for Roadside Furniture."

This Standard specifies criteria and advice for the structural design of sign and signal gantries of portal and cantilever types for use on national roads including motorways, where any part of the sign or motorway signal and their supporting structure is mounted over the carriageway, central reserve, hard shoulder and/or hard strip.

The selection of suitable sign and signal configurations is outside the scope of this standard. Refer to the TII Publications SCDs for Structural Steelwork for further information pertaining to the structural form of permissible sign supports.

Scheme design is not covered by this document. It is assumed that the gantry positions are determined as part of the scheme design. This Standard only considers the position of the gantry where it has a direct implication on the structural design.

1.2 Definitions and Abbreviations

Specific definitions applicable for this Standard are given below:

a) Carriageway

For the purposes of this Standard, the carriageway width is taken to be the traffic running surface which includes all traffic lanes, hard shoulders, hard strips and marker strips, between raised kerbs. In the absence of raised kerbs, it is the width between safety fences, less the amount of set-back. The carriageway width should be measured in a direction at right angles to the line of the raised kerbs, lane marks or edge marking.

b) Eurocodes

For the purpose of this Standard, Eurocodes shall be taken to include the Irish National Annexes and relevant requirements of associated Published Documents as specified by TII.

c) Gantry

Generic term for structure supporting signs, signals, Variable Message Signs (VMS) and other equipment. Gantry includes single or multiple portals, single and double cantilevers and combinations of same.

d) ITS Gantry

ITS gantries are those that are designed specifically for use with ITS equipment. Refer to TII Publications SCDs for Structural Steelwork for further information.

e) Outreach of Cantilever

Length of cantilever from traffic face of support to tip.

f) Published Documents

For the purpose of this Standard, Published Documents contain non-contradictory complementary information (NCCI) to assist in the application of Eurocode Principles.

g) Sign

A device carrying directional or other informational message, e.g. route information at the approach to a junction.

h) Signal

A device which uses lights to give advisory or mandatory instructions, e.g. stop, or 50 kph speed restriction.

i) Standard Gantry

Typical gantry structure that has been designed for possible re-use without modification across the network. Refer to TII Publications SCDs for Structural Steelwork for further information.

j) Supports

Vertical structural member supporting horizontal member, sign, signal and/or associated equipment.

k) Variable Message Sign (VMS)

Sign capable of displaying a variety of text, messages and/or symbols.

l) Vehicle Restraint System (VRS)

Installation to provide a level of containment for errant vehicles in order to limit damage or injury to road users. All gantries within the clear zone must be designed for the vehicle collision loading given in Table 4.2 regardless of the presence of a Vehicle Restraint System.

References in this Standard to IS EN documents include their Irish National Annexes.

2. General Design Principles

2.1 Siting

Once the need for a gantry has been established, the siting of structures shall be in accordance with DN-GEO-03031.

2.2 Design Procedures

The design criteria are set out in sections 3 and 4 with the design working life given in clause 2.4.

2.3 Technical Acceptance

Technical Acceptance of the designs for construction, alteration and re-positioning of sign/signal portal and cantilever gantries must comply with the requirements of DN-STR-03001 and must be obtained from the structures section of TII prior to any construction.

2.4 Design Working Life

The required design working life for gantries is 60 years.

In the design for wind and thermal effects, the return period for these effects must be taken as the design working life of the gantry. In the design for fatigue, the design working life must be based on the design working life plus 10 years.

2.5 Design for Maintenance

The design of the gantry shall consider its future maintenance. This must be considered in accordance with the Technical Acceptance requirements given in DN-STR-03001.

The positioning of items requiring inspection and maintenance, such as bolted connections, junction boxes, CCTV cameras etc. shall take account of their security and how they are accessed.

2.6 Structural Layout

All elements must comply with the dimensional requirements set out in DN-GEO-03036 for cross sections and headroom. This must allow for deflections due to variable actions (permanent, imposed, wind, snow and thermal) in the serviceability limit state combinations. On portal type gantries, the levels at the ends of the beam shall be the same. The clear headroom under the gantry and any sign attachments shall be 5.8m minimum.

On dual carriageway roads consideration shall be given to providing portal gantries spanning both carriageways without support in the central reserve.

Gantries shall not be located less than two times their maximum height clear of any over-bridge unless the interaction between the two structures with respect to wind turbulence is considered in the design. Signs and/or signals are not permitted to be attached to bridge structures.

2.7 Construction on Site

To minimise disruption on site due to gantry construction, as much of the gantry structure as possible should be constructed off site. Foundations should be constructed in advance of the erection of the superstructure and should aim to avoid disruption of the carriageway surfacing and/or minimise traffic management on roads in use. Templates for both position and alignment of the holding down arrangements should be used, especially when the gantry superstructure is to be erected on foundations constructed by others.

To minimise traffic management requirements for fitting out of gantries, as much assembly of the signs and signals as practicable shall be undertaken on the ground, either at the fabrication shop or close to the site, prior to erection of the main span member.

Where possible, connections should be simple and clearly visible from the verge to enable visual inspection from a position of relative safety.

2.8 Adaptability

Structural holding down bolt arrangements shall be designed such that subsequent removal and replacement of the gantry structure may be readily undertaken.

The design of the gantry structure, and the connections between support and foundation, and if applicable, support and main horizontal beam, shall facilitate rapid and simple installation and removal in order to keep traffic disruption due to traffic management to a minimum.

The Designer shall consider in the design for the likely future repositioning of, or changes to actions from, equipment or signage on the gantry.

The above design considerations provide the user with the opportunity to pick those features for immediate and possible future use needed on the scheme under consideration. A list of the items that might be included is given in Appendix F. By this means many of the necessary requirements can be described and new designs submitted for approval can be evaluated against these requirements.

2.9 Robustness

The gantry arrangement and components shall be sufficiently robust to resist damage during transportation, erection and in-service/maintenance. Mounting systems for equipment shall enable the gantry to be transported and erected with the equipment in place.

2.10 Use of dissimilar metals

Where dissimilar metals are to be used, the connections shall be designed to avoid the risk of galvanic corrosion. The electrical bonding of all metal components shall be maintained.

2.11 Supports

For standard gantries and ITS gantries, the design of supports shall ensure that local damage under the actions given in chapter 4 does not result in the collapse of the gantry.

2.12 Mitigation of Vandalism and Theft

The design should include mitigation measures to reduce vandalism and the risk of theft of components and materials. Mitigation measures must be included in the Technical Acceptance Report.

Where practicable, the arrangement or detailing of the supports should be such as to prevent them being used as a means of ready access to the superstructure, particularly at gantries located close to areas of habitation.

2.13 Environmental

The environmental impacts of the gantry shall be minimised as far as reasonably practicable.

2.14 Access

Gantries supporting Advance Direction Signs (ADS) only shall not be provided with a fixed means of access for inspection and maintenance.

Gantries supporting Variable Message Sign (VMS) or Automatic Number Plate Recognition (ANPR) cameras shall incorporate fixed access. Fixed access shall be in accordance with the TII Publications SCDs for Structural Steelwork and Appendix E.

3. Limit State Design

3.1 General Design Requirements

Eurocodes bridge parts shall be used for the design of gantries. This Standard provides complementary requirements that address aspects not covered.

Steel gantry structures shall be designed in accordance with the relevant parts of IS EN 1993, including the requirements of the Irish National Annexes, and in accordance with TII's requirements for the use of Eurocodes.

Concrete foundations shall be designed in accordance with the relevant parts of IS EN 1992 and IS EN 1997 and the associated Irish National Annexes while incorporating the requirements of DN-STR-03013.

Structural materials other than those stated in 3.2 and 3.3 are not permissible.

3.2 Deformations

Structural deformation due to permanent actions (self-weight and removable) at the centre of spans of portals or tips of cantilevers shall be counteracted by pre-camber above the chord line for portals, or the horizontal for cantilevers to avoid visible downward deformation.

Deformations in the serviceability limit state shall be limited such that they do not exceed the values given in Table 3.1 for the Characteristic combination of actions. (See Appendix A Figure A3).

The deformation at the extremities of the structural support shall be derived from the sum of the components of the effects of the actions in the supports, cantilever and sign supports. The height of the support shall be measured from the top of any support plinth to the underside of the main horizontal beam or cantilever.

Table 3.1: Limiting Structural Deformations of Gantries

Element and Position	Direction of Deformation	Fixed and Variable Message Signs and Signals
Top of Support of Cantilever or Support of Portal	Horizontal (x or y)	1/300 of height
Tip of Cantilever or extremity of structural sign or signal support, (see Appendix A Figure A3)	Horizontal (x)	1/150 of outreach plus heights of support and sign upright
	Vertical (z)	1/300 of outreach plus height of support
Within span of Portal or extremity of structural sign or signal support	Horizontal (x)	1/200 of span plus heights of support and sign or signal support
	Vertical (z)	1/300 of span plus height of support

The minimum indicative section sizes for the different gantry types are given on the TII Publications SCDs for Structural Steelwork. The Designer must verify all section sizes in accordance with the Eurocodes and the associated Irish National Annexes.

3.3 Combined Effect of Loads

The combined effects of axial compression / tension, torsion and biaxial bending shall be checked and catered for within the design of all gantry structures.

3.4 Connections

All fillet welds must have a leg length of not less than 6 mm. All fillet welds, unless noted otherwise on the TII Publications SCDs for Structural Steelwork shall be continuous.

Vibration resistant fasteners shall be used.

3.5 Closed Hollow Section Requirements

Steel hollow sections shall be designed to resist the ingress and retention of water or moisture by gravity flow, capillary action or condensation. The end plates must be of a thickness equal to the thickness of the walls of the hollow section.

The end plates shall be joined by continuous structural quality welding. Should there be a possibility of water entering in significant quantity and subsequently freezing, then drain holes shall be provided. Hollow sections shall be provided with drain holes at all low points and the size of the hole shall be appropriate to the void being drained, but shall not be less than 10mm diameter.

3.6 Fatigue

The design working life for fatigue is set out in clause 2.4. The fatigue performance of the structure shall be verified and the fatigue life assessed for the action effects obtained from wind and vehicle buffeting actions set out in clause 4.16.

Where forms of construction are used for which there is no adequate fatigue data; approaches to fatigue verification, including testing where necessary, shall be given in the Technical Acceptance Report and agreed with TII.

Fatigue of steel structures shall be verified in accordance with IS EN 1993-1-9.

3.7 Foundations

The design of the foundations, including holding down bolts, plinths, bases and all other structural aspects, shall be such that they have greater reserves of structural resistance than the supported gantry structure, refer to DN-STR-03013 for the requirements. This requirement is to ensure that the foundations will survive an impact action intact so that a replacement support can be installed with minimum down time.

The procedures given in IS EN 1997-1 shall be used for the design of soil structure stability.

3.8 Ultimate Strength of Soil

This condition corresponds with the following failure modes of the surrounding soil and the soil-structure interface:

a) Sliding

b) Overturning

c) Bearing capacity of the foundation soil

d) Slip failure of the surrounding soil

3.9 Serviceability Condition of Soil

The adoption of recommended safe bearing resistance for the foundation design as a simplification to calculating settlements should avoid undesirable soil movements due to settlements and tilting of the foundation. Nevertheless a separate assessment of the differential settlements and tilting of the structure is still necessary for the design of associated superstructures with in-built redundancy or cantilevers. Such movements can be calculated from a displacement or consolidation analysis. The predicted movements must be taken into account in the overall design of the structure.

Caution is necessary if reliance is placed on mobilising resistance due to passive pressure acting on spread footings or pile caps particularly on the downward slopes of embankments or cuttings, filter drains or other disturbed material. For guidance on the movement necessary to mobilise passive pressures see IS EN 1997 and PD 6694-1.

4. Actions

4.1 Actions to be considered

All actions must be in accordance with the relevant parts of IS EN 1991, its National Annex and where necessary Published Documents in accordance with TII's requirements for the use of Eurocodes.

For the purpose of calculating stresses and stability, the following actions must be calculated in accordance with the relevant Eurocode. The differentiation between the two permanent actions is not covered in Eurocodes.

a) Permanent (self-weight)

b) Superimposed dead load (removable)

c) Wind

d) Thermal effects

e) Snow

f) Differential settlement

g) Weight of soil

h) Earth Pressures

i) Accidental (vehicle collision with supports)

j) Live Loading for maintenance access (where appropriate)

Additional actions during execution in accordance with IS EN 1991-1-6 shall be included as necessary to suit proposed erection methods.

4.2 Application of actions

Each element and the structure as a whole shall be considered under the effects of actions in accordance with the National Annex to IS EN 1990 Tables NA.8, NA.9 and NA.10.

4.3 General Combination of Actions

Combinations of actions are to be derived in accordance with IS EN 1990 and Table NA.7 in the Irish National Annex to IS EN 1990.

Note:

Snow and wind loading do not need to be combined with construction actions.

Wind and Thermal loading do not need to be considered as acting simultaneously.

Where a component of superimposed dead load has a relieving effect, the partial factors, $\gamma_{G,inf}$ shall be as follows;

Fixed Elements; $\gamma_{G,inf} = 0.95$

Removable Elements; $\gamma_{G,inf} = 0$

The partial factors for snow loading shall be as follows;

$\gamma_Q = 1.5$ (0 where favourable)

4.4 Superimposed Dead Load Actions (removable)

Superimposed dead load actions (removable) include all permanent actions not forming part of the structure. This includes signs, equipment and other fixings attached to the gantry.

Characteristic values for nominal superimposed dead load actions (removable) may be based on the densities of the materials given in IS EN 1991-1-1.

The nominal action of a fixed sign shall not be less than 0.5 kN per metre of span of gantry or outreach of cantilever.

In the case of the variable message signs, signals and associated equipment, the nominal superimposed dead load action (removable) initially assumed shall in all cases be accurately checked with the actual weights of the items to be used and, where necessary, adjustments shall be made. The calculated nominal superimposed dead load actions (removable) must not be less than 1.25 kN per metre of span of gantry or outreach of cantilevers.

4.5 Adverse Effects of Superimposed Dead Load Actions (removable)

To determine the upper and lower characteristic values of the superimposed dead load actions (removable), a deviation of the total action from the characteristic or other specified values should be taken into account. This deviation should be taken equal to + 25 % and – 20 % if it is obtained through calculation and ±0% if it is determined by weighing.

4.6 Earth Pressures

In all design situations, earth pressures generated from any retained fill shall be determined in accordance with IS EN 1997-1.

For the ultimate strength and serviceability conditions the soil ‘active’ earth pressure shall be used in the design, unless otherwise agreed with TII.

4.7 Environmental Effects

For new gantries the return period for wind and thermal effects in service shall be taken as the design working life of the gantry, as specified in clause 2.5.

4.8 Application of Wind Action

Wind actions on gantries produce forces in the x, y and z directions. The x-direction is the direction parallel to the carriageway, perpendicular to the span. The y-direction is the direction along the span and the z-direction is the vertical direction.

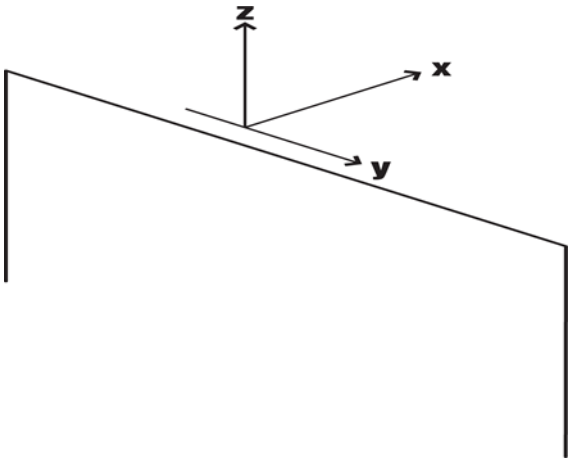

The characteristic wind action in the x, y and z directions are to be calculated based on the requirements set out in Chapter 8 of IS EN 1991-1-4 unless otherwise set out below.

The longitudinal wind action F_{wy} shall be calculated on the side elevation of the structure including any individual members not effectively shielded.

Where there is an impervious horizontal surface abutting the lower edge of a vertical sign face or other impervious face, a vertical downward component of the wind force F_{wz} acts concurrently with the horizontal one, F_{wx} blowing into the ‘L’ as shown in Appendix A Figure A2.

The characteristic vertical wind action F_{wz} should be taken as acting at the centroid of the appropriate area and shall be derived from: $F_{wz} = 2qA_4$ modification factor as given in Table 4.1 where A4 is the solid area of the horizontal surface on the windward side of the vertical solid face. The force F_{wz} in accordance with IS EN 1991-1-4 should be considered together with F_{wz} if it produces an adverse effect.

4.9 Dynamic Sensitivity of Gantry

Clause 8.3.2 in IS EN 1991-1-4 assumes that the dynamic response procedure is not required. This assumption should be verified in accordance with IS EN 1991-1-4 and the associated Irish National Annex. If the gantry is found to be dynamically sensitive, the provisions in Appendix D of this standard shall be applied.

4.10 Wind Action Combinations

Combinations of F_{wx}, F_{wy}, F_{wz} should be as required by IS EN 1991-1-4 Chapter 8.

4.11 Force Coefficients

For gantries not susceptible to dynamic excitation by wind, the force coefficients F_{wx}, F_{w}y, F_{wz} and the wind factor C are to be calculated in accordance with clause 8.3 in IS EN 1991-1-4.

The force coefficient should be calculated in accordance with IS EN 1991-1-4, unless otherwise specified below.

For parts of gantries with lattice structures, the force coefficient should be calculated based on clause 7.11 in IS EN 1991-1-4.

The following force coefficients, $c_{f,x}$ should be taken for flat surfaces, such as sign faces, in directions both parallel and normal to the sign:

Table 4.1: Modification factor of drag coefficients for rectangular plates

max dimension min dimension	Factor
∞	1.00
20	0.75
17	0.70
10	0.64
8	0.63
4	0.59
2	0.57
1	0.55

4.12 Snow Action

Characteristic snow action is to be calculated in accordance with IS EN 1991-1-3. The recommended values set out in the National Annex should be adopted. µi shall be taken as 0.8 for gantries.

4.13 Vehicle Collision Actions for gantries

When any part of the sign or structure is over the carriageway, hard shoulder or hard strip, supports within the clear zone shall be designed to withstand at least the vehicle collision actions given in Table 4.2. These forces are applied as shown in the table and regardless of the presence of a VRS. The actions shall be applied concurrently. These actions shall be considered to be transmitted from the vehicle restraint system provided at the supports with residual actions acting above the vehicle restraint system.

Table 4.2: Equivalent static design forces due to vehicular impact on gantry support members

	Force Fdx (kN) in the direction of normal travel	Force Fdy (kN) Perpendicular to the direction of normal travel	Point of application on support
Main Load Component	285	95	At the most severe point up to 0.75m above the carriageway
Residual Load Component	190	190	At the most severe point between 1m and 3m above carriageway level

Vehicle collision actions on gantry supports shall be applied as part of the accidental combination only.

Accidental actions are to be applied in accordance with the principles set out in IS EN 1991-1-7 and the associated Irish National Annex.

Foundations shall be designed to resist the impact forces transmitted from the collision on the following basis:

a) Only ULS checks are required, both for structural elements and soil-structure interaction;

b) Full loading shall be considered for checking against overturning.

4.14 Local Effects of Impact on Gantry Supporting Structures

The local effects of vehicle impact loads on gantry support structures may be considered by using any of the following methods:

i. Finite element model

ii. Plastic theory of plate deformation

iii. Paper by Ellinas CP and Walker AC, *Damage on offshore tubular members*, IABSE colloquium, Copenhagen Ship collision with bridge and offshore structures, 1983

iv. Standard formulae contained in *Stress and strain*, Roark RJ, 4th Edition or later, McGraw Hill.

4.15 Holding-down bolts for Gantries

Bases for gantries are required to have a greater reserve of strength, so that in the event of a severe impact, they will have a higher probability of survival and a replacement column support can then be fitted. Holding-down bolts, anchorages, plinth bases and structural aspects of foundations shall be checked under collision load conditions at SLS using a factor of 1.3/1.9 applied to forces given in Table NA.2 of the Irish National Annex to I.S. EN 1991-1-7 and at ULS using a factor of 1.75/1.5 applied to design forces given in Table NA.2 of the Irish National Annex to I.S. EN 1991-1-7.

4.16 Fatigue

The gantry shall be designed for buffeting actions from high sided vehicles in accordance with the recommendations provided in DN-STR-03018 “The Design of Minor Structures.”

Fatigue actions due to wind gusting shall be determined in accordance with IS EN 1991-1-4. The characteristic wind action is to be calculated as set out in clause 4.17. The effects of wind shall be combined in a Miner’s summation using the data set out in Figure B.1 of IS EN 1991-1-4 for the full range of cycles considered in this figure.

For new gantries, the design working life for fatigue purposes shall be in accordance with clause 2.5. The fatigue effects from high vehicle buffeting and wind gusting shall be combined in a Miner’s summation calculation to give a value of less than unity; see IS EN 1993-1-9, Annex A.

5. General Design Requirement

5.1 Structural Layout

The horizontal dimensional clearances between the structure and vehicle restraint systems shall be in accordance with DN-REQ-03034 and DN-GEO-03036.

5.2 Fixings/Connections

All fixings, including those for equipment, as far as reasonably practicable, shall be securely attached to the structure using vibration resistant fixings.

All parts of the gantry structure and attached items and fixings shall be prevented from falling onto the carriageway.

The design of the mounting arrangements for signs and signals shall take account of the possible structural interaction between the enclosure and supporting members.

The equipment shall be mounted on the gantry structure in such a way as to limit vibration and movement and to prevent the equipment from detaching during an impact.

Some, but not all, items of equipment are supplied with a full or partial mounting arrangement. The design of these mounting arrangements shall be tailored to match the requirement of the gantry and its mounting points. If required, the mesh infill panels may be cut on site to suit and facilitate the mounting arrangement for the equipment. Provision shall be made to cover any voids or gaps between the gantry and the equipment, after the installation of the equipment, to protect from objects falling onto the carriageway below. For further information refer to the TII Publications SCDs for Structural Steelwork.

The element of the equipment mounting included in the gantry design shall provide the capability for any horizontal and vertical alignment necessary for the particular piece of equipment, not already catered for by the integral arrangement.

The area of the holding down arrangements shall be designed to be free draining and corrosion resistant. The tops of holding down bolts must be protected by plastic caps filled with an anti-corrosion compound.

5.3 Erection/Demounting

Site welded connections shall not be used unless otherwise agreed with TII.

The design of the gantry shall facilitate erection and demounting with the minimum of disruption to road users.

Where the gantry is not designed to be erected in one piece, the supports shall be self-stable to allow a phased execution procedure.

Provision for lifting the various elements of the gantry shall be provided as part of the permanent design of the gantry in accordance with the TII Publications SCDs for Structural Steelwork.

5.4 Protection for Road Users and Structure

Vehicle restraint systems shall be provided at gantry supports in accordance with DN-REQ-03034. Details of the vehicle restraint system must be agreed with TII.

5.5 Protection of Steelwork

The gantry structure shall be protected against deterioration from environmental causes with appropriate protection systems in accordance with CC-SPW-01900 Protection of Steelwork Against Corrosion. These systems shall be designed to minimise major maintenance requirements during the design working life of the structure as defined in clause 2.4.

Steel gantries shall be protected by a Type II protective system in accordance with CC-SPW-01900 Protection of Steelwork Against Corrosion. Accessibility shall be taken as Difficult Access and Major Maintenance shall be assumed to be 20 years.

Weathering steel is not permissible for gantries.

5.6 Supports

In order to achieve the required resistance, it may be necessary to encase or widen the support to form a concrete plinth to a height sufficient to cater for the low level collision action and/or position structural members out of the collision zone.

5.7 Drainage

Provision shall be made for the drainage of water from the structure and fixings. All walkways, roofs of enclosures and other surfaces shall have adequate falls to allow water to run off. Where run off can concentrate, it shall discharge clear of the carriageway and hard shoulder/strip and clear of the structure.

Provision shall be made to drain hollow sections, see clause 3.13.

5.8 Identification Plates

A permanently fixed metal identification plate shall be attached to each new gantry. The following information shall be included:

a) Name and location of Manufacture

b) Year of manufacturer

c) Northing and Easting

d) Self-weight of gantry plus attached equipment.

The characters must not be less than 10mm high nor more than 20mm high. Details to be agreed with TII.

5.9 Electricity, Cable Routes, Electrical Earth and Lightening Conduction

Where electrical plant is installed on gantry structures, provision shall be made to enable the supply to be isolated before work takes place on electrical equipment. It is noted that equipment for motorway communications is a permanent installation. It is therefore based on 240 volts and is installed in accordance with ET101 'National Rules for Electrical Installations, Fourth Edition' and Amendment No. 1 by the Electro-Technical Council of Ireland (ETCI).

A structured cable management system shall be devised and incorporated into the structural design of the gantry. It shall provide continuous protection from the ducted network in the nearside verge to a point 3.5m above adjacent ground level to protect against accidental damage, theft and vandalism. The system shall permit rapid fixing and removal of cables and shall include quick release joints at the gantry support/boom connections. Where cable routes are external to the structure, they shall be positioned remote from the usual line of sight, i.e. on the down-stream face, where possible.

The minimum radius for a cable route, the entry and exit points to internal ducts and the provision of draw cords shall be in accordance with the relevant specification.

All metal components of the structure shall have electrical continuity in accordance with ET101 'National Rules for Electrical Installations, Fourth Edition' and Amendment No. 1 by the Electro-Technical Council of Ireland (ETCI). Provision shall be made to allow for the connection of any equipment fitted to the gantry and all individual components of the gantry to be earth bonded and for the base of the structure to be connected to earth. The earthing system shall be in accordance with ET101.

By providing electrical connection between the reinforcement in the foundations, holding down bolts and metal gantries, it may be possible to achieve adequate earth without the need for earthing rods. Tests shall be made in dry conditions at each location to ensure that this has been achieved.

A conduction path, to convey lightning strikes from all parts of the structure to earth, must be provided in accordance with the appropriate parts of IS EN 62305.

6. References

DN-STR-03001: Technical Acceptance of Road Structures on Motorways and other National Roads

DN-STR-03018: Design of Support Structures for Roadside Furniture

DN-REQ-03034: Safety Barriers

DN-GEO-03036: Cross-sections and headroom

TII Publications

NSAI Publications: National Standards Authority of Ireland

a)	IS EN 1990, 1991, 1992, 1993, 1997, 1999 Eurocodes, various parts and dates and Irish National Annexes
b)	IS EN 12767: Passive safety of support structures for road equipment
c)	IS EN 12899-1: Fixed, vertical road traffic signs. Fixed signs
d)	IS EN 60068: Environmental testing
e)	IS EN: 1317-1: Road restraint systems. Terminology and general criteria for test methods
f)	IS EN 62305: Protection Against Lightening, various parts
g)	ET101:2008: 'National Rules for Electrical Installations, Fourth Edition; and
h)	Amendment No. 1: 2011 by the Electro-Technical Council of Ireland (ETCI).

BSI Publications: British Standards Institution, London

a)	BS 4211	Specification for permanently fixed ladders
b)	BS 381C	Colours for Identification, Coding and Special Purposes
c)	BS 4800	Schedule of paint colours for building purposes
d)	BS 6180	Protective barriers in and about buildings

Traffic Signs Manual, Department of Transport

a)	Chapter 1	Introduction and Sign Location
b)	Chapter 2	Directional Information Signs
c)	Chapter 3	Variable Message Signs

Road Traffic (Signs) Regulations 2006

Safety Health and Welfare at Work (Construction) Regulations 2013

Appendix A: NRA Gantry Figures

Figure 1a): TII Group 1 Gantry (refer to RCD/1800/1, RCD/1800/2 & RCD/1800/3)

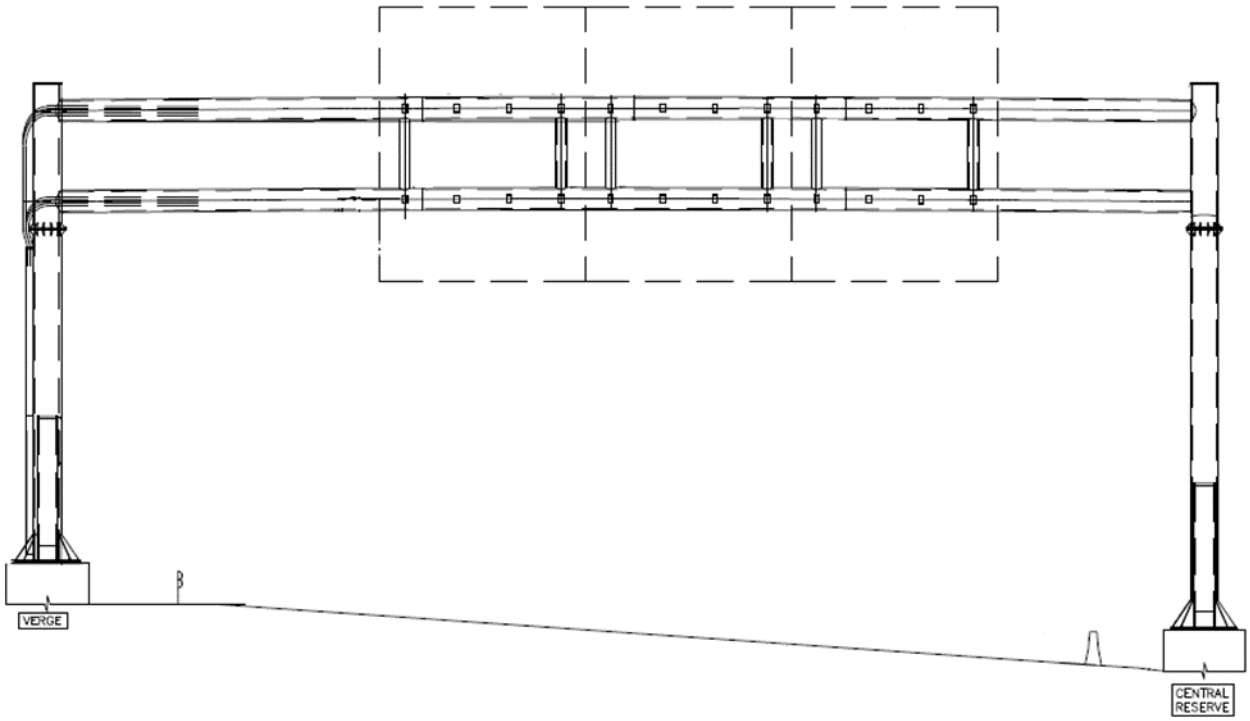

Figure 1b): TII Group 2 Gantry (refer to RCD/1800/4, RCD/1800/5 & RCD/1800/6)

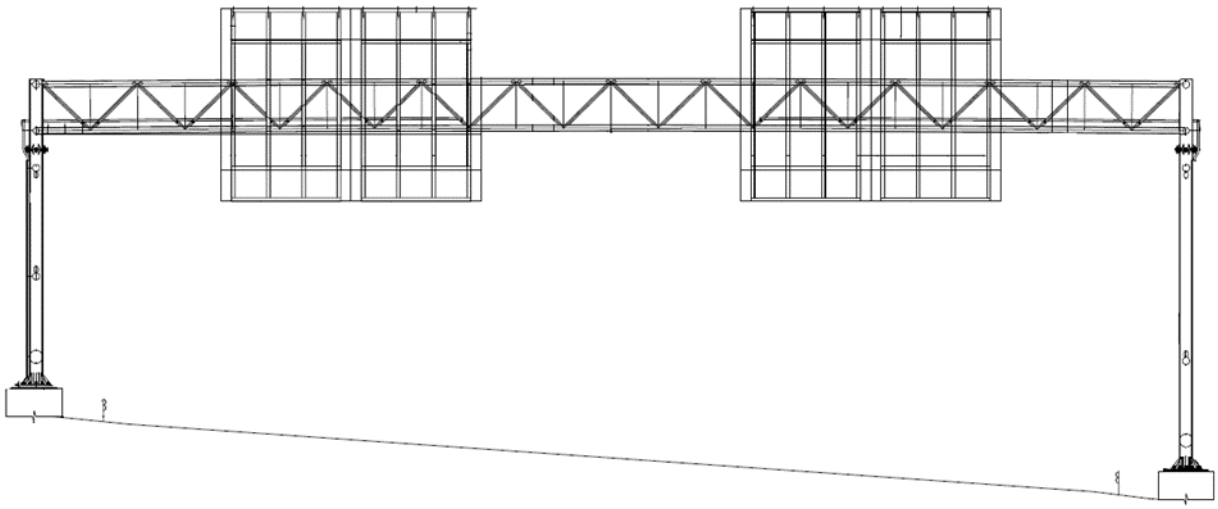

Figure 1c): TII Group 3 Gantry (refer to RCD/1800/7, RCD/1800/8 & RCD/1800/9)

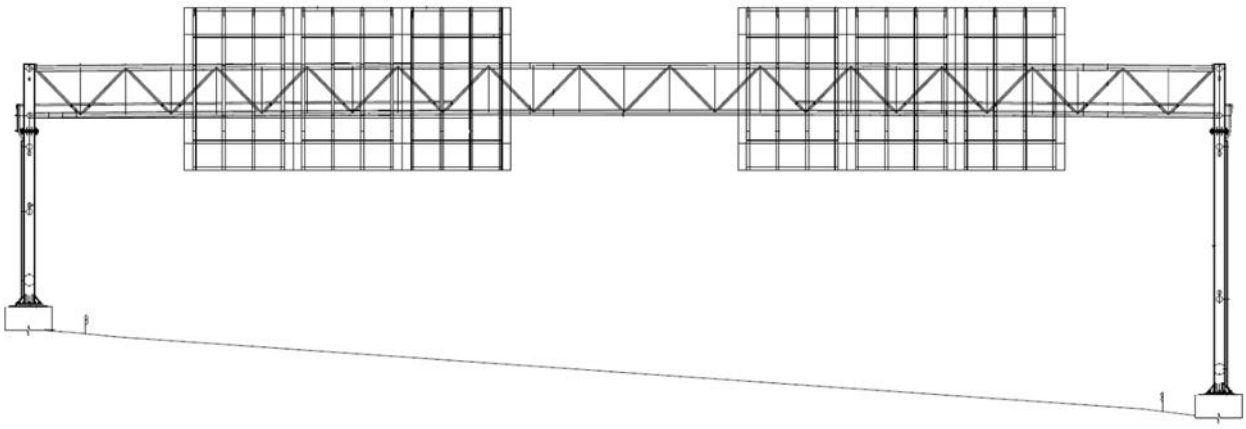

Figure 1d): TII Group 4 Gantry (refer to RCD/1800/10 & RCD/1800/11)

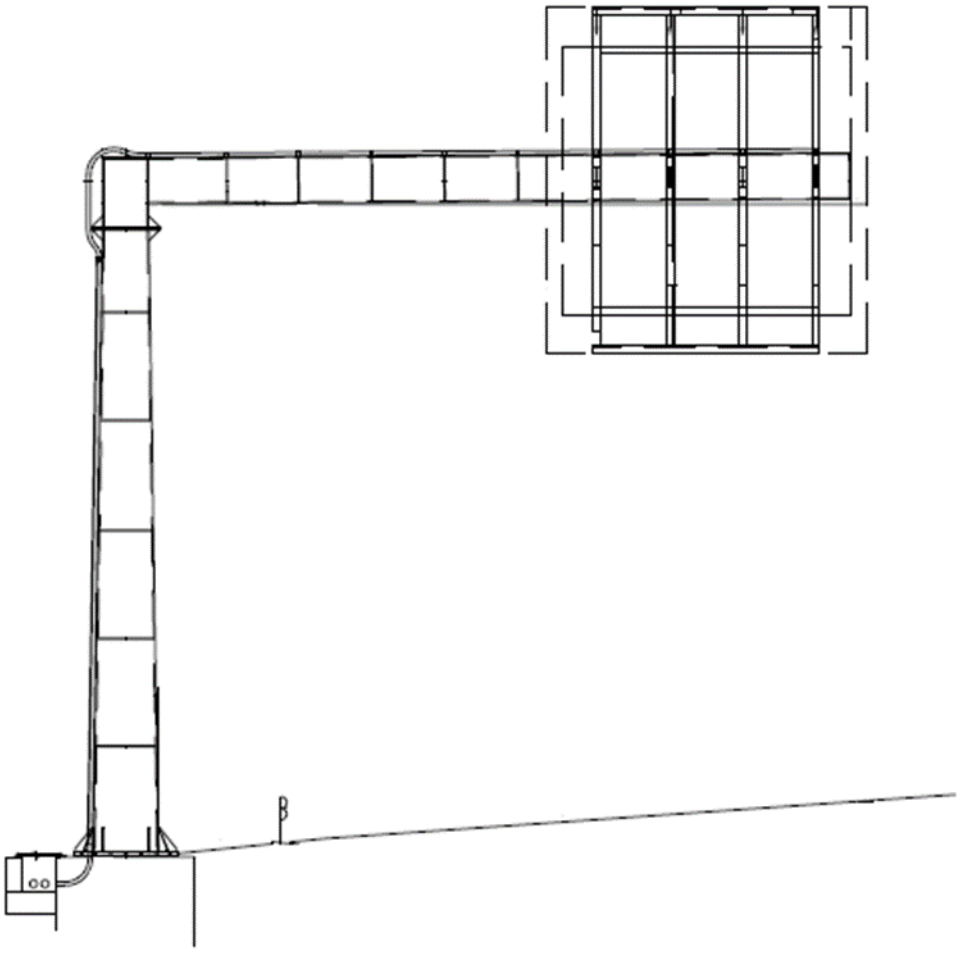

Figure 1e): TII Group 5 Gantry (refer to RCD/1800/12 & RCD/1800/13)

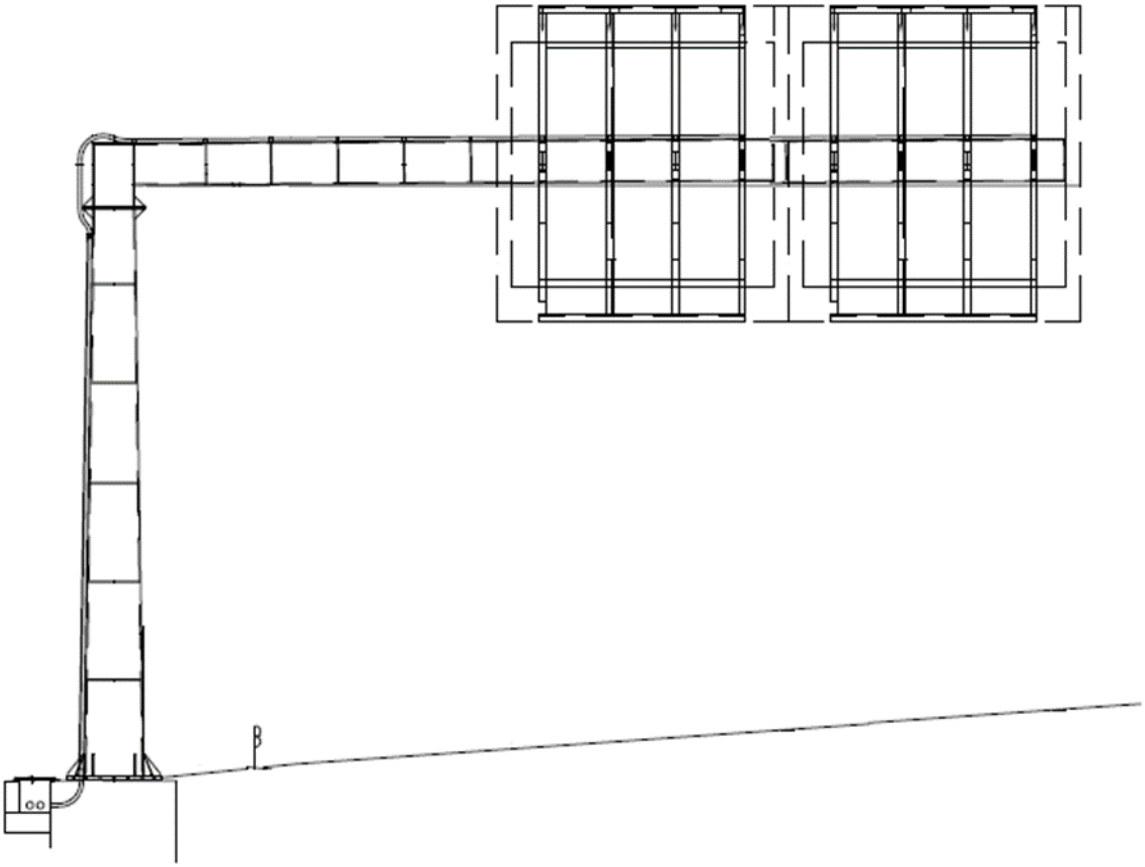

Figure 1f): TII Group 6 Gantry (refer to RCD/1800/14, RCD/1800/15, RCD/1800/16 & RCD/1800/17)

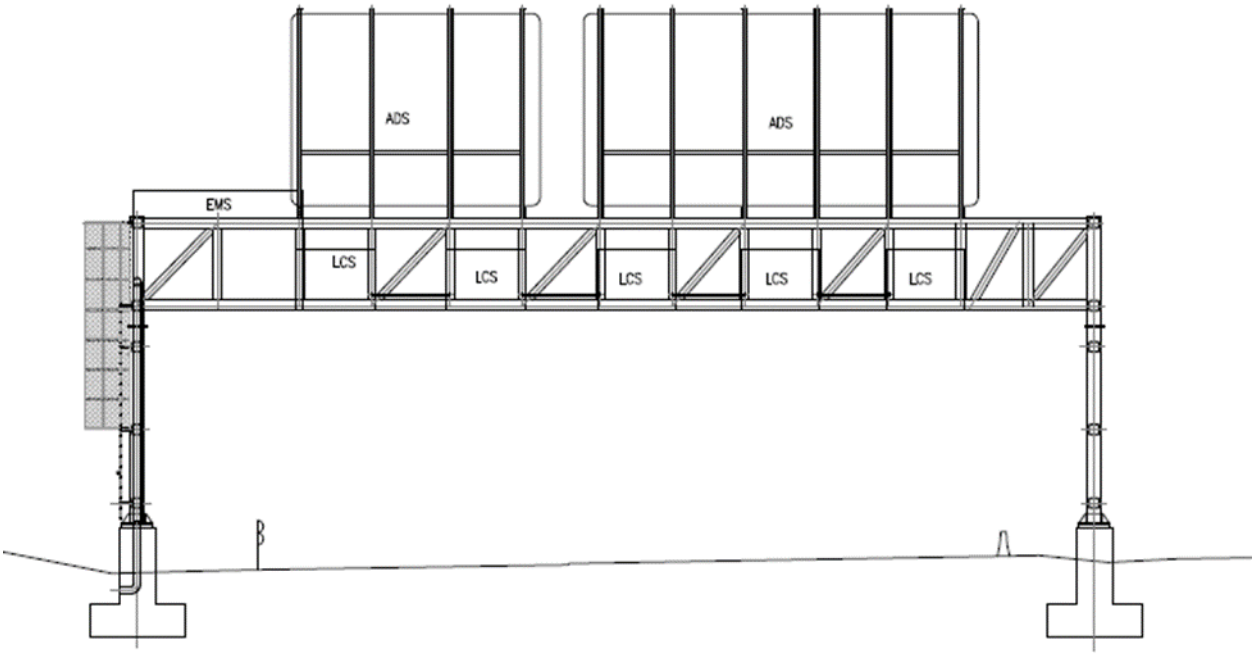

Figure 1g): TII Group 7 Gantry (refer to RCD/1800/18, RCD/1800/19, RCD/1800/20 & RCD/1800/21)

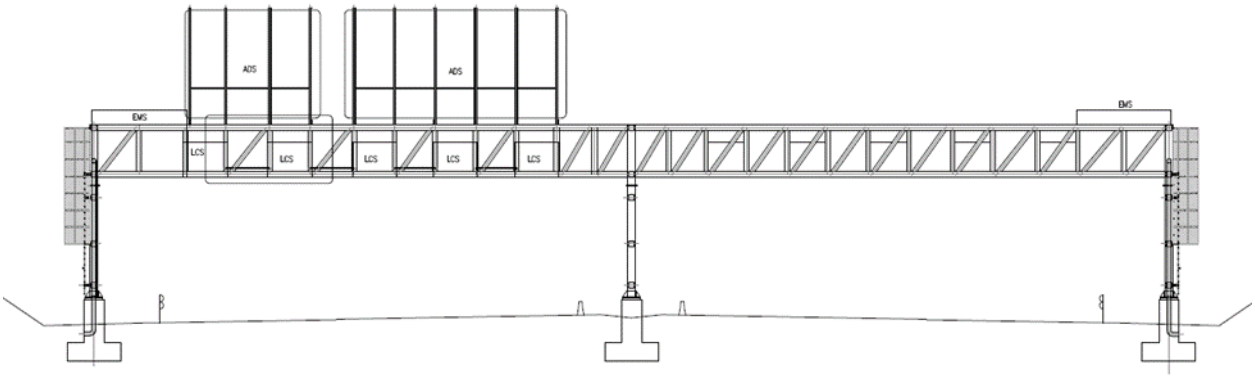

Note:

Vehicle Restraint Systems are shown in front of all gantries. All gantries must be designed for vehicle collision loading given in Table 4.2 whether a VRS is provided or not.

Figure A1: Examples (1a-1g) of Sign Structures within the Scope of this Standard

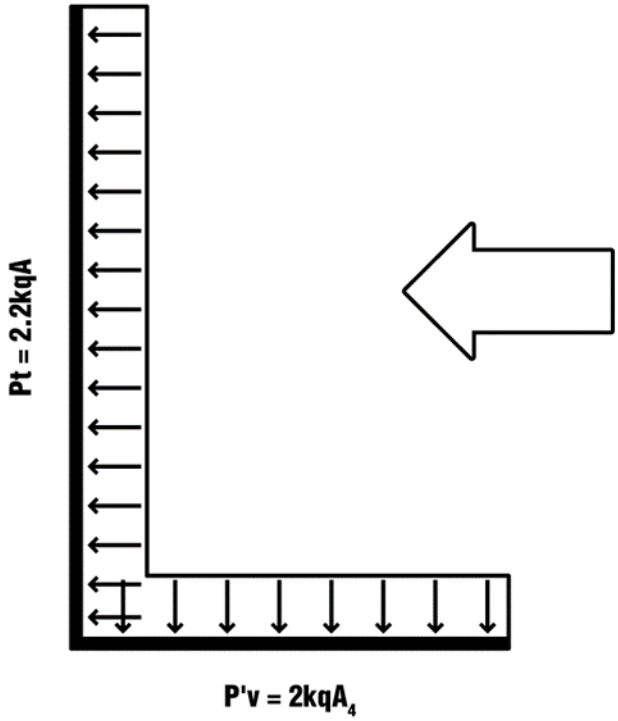

Where k = modification factor as given in Table 1.

Figure A2: Wind loading on L shaped cross sections with solid walkways

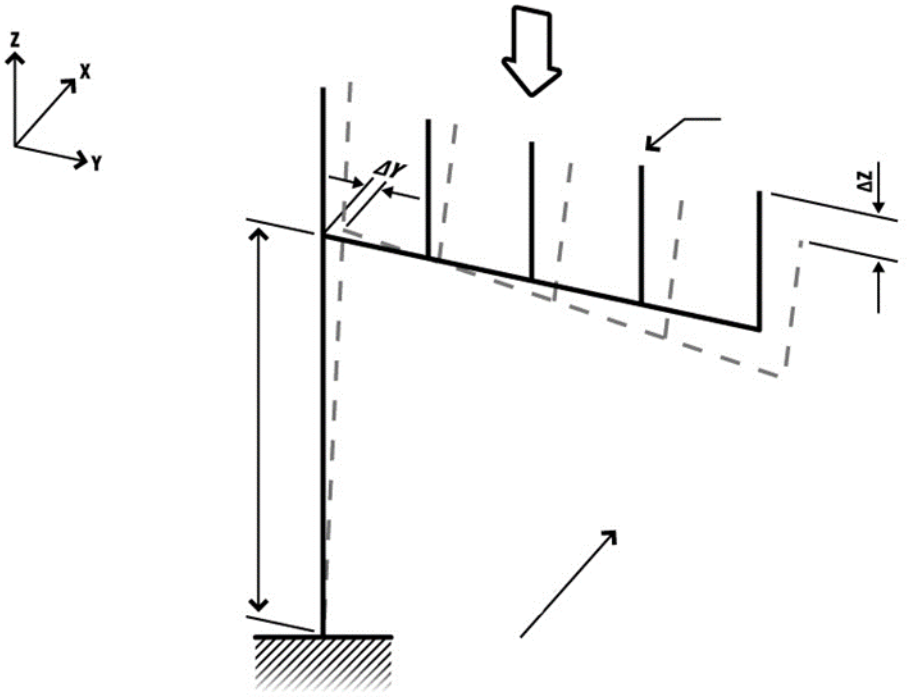

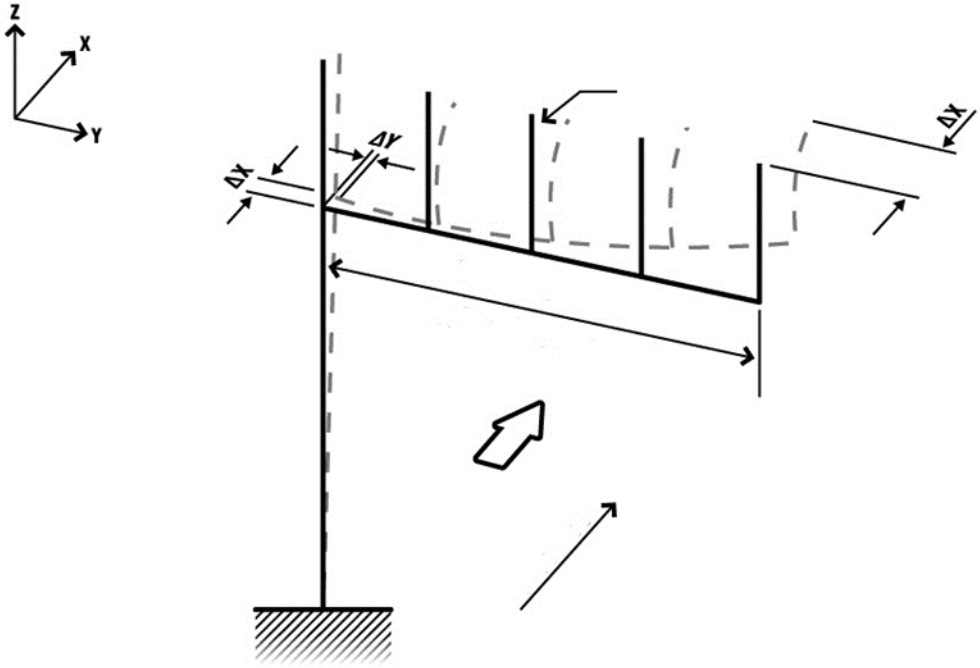

Figure A3: Structural deformations of support posts and cantilevers (see Table 3.1

Appendix B: Typical Equipment

General

B.1. This Appendix outlines the typical equipment and signs that may be included on a gantry.

B.2. The equipment that a gantry is required to carry should be defined on a project specific basis.

Overloading of Information

B.3. The messages and information provided on a sign must be developed in accordance with the guidance given in Chapter 3 of the Traffic Signs Manual published by the Department of Transport, Tourism and Sport. Any design outside the recommendations of the Traffic Signs Manual shall be agreed as a departure from standards by TII.

Combining of Functions

B.4. To minimise the proliferation of gantries, it is desirable to design gantries to accommodate equipment and signs which achieve separate functions. The TII Publications SCDs for Structural Steelwork make provision for combining a variety of equipment and Advance Direction Signs (ADS) on a single gantry structure. When gantry structures are designed for multiple purposes, the layout of the equipment and signs must be agreed with TII.

Advanced Directional Signage (ADS)

B.5. The layout of the sign shall be in accordance with Chapter 2 of the Traffic Signs Manual.

Size of Sign to be allowed for

B.6. The size of sign to be allowed for in design depends on sign face design. The basis of design of sign layouts is given in Chapter 2 of the Traffic Signs Manual. The size of the panel is influenced by:

a) The ‘x’ height adopted

b) The number of destinations

c) The layout, such as spacing, and the need for arrows and panelling of destinations where appropriate

The ‘x’ height is by far the greatest influence and needs to be such that the sign is legible to the driver for sufficient time to be able to read and act upon the message as he approaches. This is governed by the approach speed of the vehicle and hence the siting distance.

B.7. The sign must be visible from the maximum distance at which it can be read, depending on vehicle speed and the letter ‘x’ height as defined by Table 2.3.1 in Chapter 2 of the Traffic Signs Manual. Maximum sign height assumed in TII Publications SCDs for Structural Steelwork is 5200mm.

Variable Message Signs

B.8. Where required, gantry designs shall allow for the mounting of variable message signs and their associated control equipment, together with their subsequent removal for maintenance and replacement.

Maintenance of Signs

B.9. Traffic signs need to be cleaned in accordance with 1.6.11 – 1.6.12, Chapter 1 of the Traffic Signs Manual. Rotating prism variable message signs have a high maintenance requirement and shall be considered in the same manner as signals. Consideration shall be given to the provision of luminaires to IP65 enclosure rating along the walkway for use by maintenance personnel during periods of low lighting.

Mounting of Signs

B.10. Where appropriate, signs shall be mounted at a small inclination to the vertical to improve visibility. The structural member to which the sign is to be attached shall be flush faced and suitable for use with bands or clamps to fasten the signs. Projecting bolt heads and cover plates, that prevent the sign from being fixed in one plane, shall be avoided. The design of the sign support members must be such that subsequent resigning can be implemented, possibly to a different sign size, without major disruption to the main members of the gantry. The sign support members shall be readily capable of removal and replacement to suit revised sign configurations.

B.11. Where signs are to be mounted on the top of a beam or girder and a light screen independent of the sign panel is to be provided, the screen shall have a horizontal straight top edge after allowing for any pre-camber and/or deflection under self-weight. The sign support members shall be plumb in elevation. To achieve the latter, header rails are advisable.

Motorway Signals

B.12. The other main purpose of gantry structures is to support motorway signals over the carriageway. The Traffic Signs Manual describes the different types of motorway signals available and gives the criteria to be satisfied for their provision.

Closed Circuit Television Cameras

B.13. Where it is required to locate closed circuit television (CCTV) cameras on gantry structures, the position of the camera shall be such that a clear, unimpeded view of the motorway is provided. Where fixed cameras are used, the field of view will depend on the coverage of other cameras within the overall CCTV scheme.

B.14. Where required, consideration shall be given to making provision for the incorporation of such a mast on the gantry structure. Allowance for installation and maintenance will be required and this will include for the camera to be winched or lowered down into the walkway area of the gantry structure. The mechanism for lowering the camera shall be operated from within the confines of the gantry structure walkway and shall not introduce any risk of objects falling onto the carriageway.

Mounting of Signal Equipment

B.15. The design of gantry structures for ITS equipment shall be such that they can accommodate a variety of motorway signs and equipment without the need for major modifications.

B.16. Consideration shall be given in the design of the gantry to allow for the addition of unspecified equipment at a later date without the need for structural checks and preferably without the

need for interference with any structural element. Equipment plates with a matrix of holes or a proprietary racking system could be considered.

B.17. On combined function gantries the design shall ensure that the sign face, including the junction number and distance marker, can be viewed without visual obstruction and that information over-loading will not occur.

Power Distribution

B.18. Consideration shall be given to the provision of power sockets along the walkway for use by maintenance personnel. Typically these would be used for test equipment, power tools, lifting hoist etc.

Third Party Equipment

B.19. The presence of equipment provided and installed by a third party, usually for vehicle detection, shall only be permitted when there is no practical alternative. Efforts shall be made to limit the duplication of any such equipment.

Ground Works

B.20. Where signals are installed on gantries or lighting is provided, cabinets are usually required adjacent to the gantry. Ducts for electric supply and communication cables shall be provided from the cabinet to the base of the superstructure and cable routes along the road. Cabinets shall be located so as to be unobtrusive and integrated with the landscape design where possible.

B.21. A plinth at the base of the gantry ladder and between the ladder, cabinet and point of entry from the road shall be included, with steps and hand railing as appropriate. A maintenance vehicle lay-by area shall be provided adjacent to the gantry to facilitate safe parking to maintenances personnel. For further information on cabinets and ancillary infrastructure on cabinets refer to TII Publications Standard Construction Details for Traffic Control and Communications and DN-ITS-03029 Traffic Controls and Communications Infrastructure Design.

Appendix C: Appearance

General

C.1. The overall appearance is an important consideration for gantries. The TII Publications SCDs for Structural Steelwork for a particular gantry type shall be used to ensure a consistency of structural form. All section sizes and details given on the TII Publications SCDs for Structural Steelwork are minimum indicative sizes only. All sections, details and foundations must be analysed and designed for each gantry by the Designer.

C.2. When considering the environmental and aesthetic aspects related to the location and detailed design of sign gantries, the Designer should ensure that visual impact and appearance are given full attention to that of the function. The Designer should take into account the following clauses in considering the visual impact and appearance of sign gantries.

Environmental and Aesthetic Considerations

Context

C.3. Visual impact shall be assessed by a combination of the degree to which the feature is prominent in the view, and the quality of the landscape, urban and rural, in which the feature is located. Visual impact will be caused upon the surrounding landscape by gantry construction both during the day, and by any associated lighting during the hours of darkness. These impacts shall be assessed and minimised in relation to:

a) The quality of landscape in which the gantry is proposed. (Designated Landscapes, etc.).

b) The extent of the visual envelope created, day and night.

c) The number of residential properties affected.

Information collected under a), b) and c) above shall be presented for assessment in an approved format and shall be included in the Technical Acceptance Report.

C.4. Further assessment of visual impact caused by lighting should be considered in conjunction with the Institution of Lighting Professionals guidance document GN101:2011 'Guidance Notes for the Reduction of Obtrusive Light.

C.5. As a general guide, gantries shall be located low in the landscape, preferably in cutting and not visible above the skyline.

C.6. In practice there are overriding functional constraints which establish the required location and size of signs and gantries in relation to road geometry and proximity to junctions. Although the most effective mitigation is the initial choice of location for a gantry, where standards dictate this is not possible, developing a sympathetic appearance to the structure is the best solution to adopt, accompanied by consideration of physical and vegetative visual barriers which can assist in mitigating the visual impact created.

Form and Aesthetics

C.7. Guidance on the form and aesthetics of gantries can be found in the TII Publications SCDs for Structural Steelwork. Different families of gantries have been established and their structural form is given on the RCDs. The TII Publications SCDs for Structural Steelwork shall be used on all TII road schemes.

Colour

C.8. The same aesthetic criteria shall be applied to the use of colour on gantries and signs as is indicated for form, with the added caution that the colour of a gantry shall assist in promoting the function of communication, not compete with it.

C.9. Research carried out in the UK suggests that mid to soft grey is most appropriate for the British climate especially when viewing a feature against the sky. BS 4800 Medium Grey 18B21 is suitable. This colour is considered appropriate for use in Ireland.

Detail

C.10. The visual impact caused by the provision of gantries and signs may be mitigated by the selection of a suitable form of either a vertical barrier, earth bund, dense tree and shrub planting or a combination of these three elements.

C.11. There is frequently a shortage of space within the road land take, particularly where motorway widening has taken place. Where required sufficient space should if feasible be made available to establish sustainable screen vegetation and allow for good horticultural practice.

C.12. Assessment shall be made of the necessary access from the road to maintain horticultural plots which have the function of screening gantries and signs, with reasonable ease. Access through barriers, bunds and fences has traditionally been spaced at 200 m ensuring none of the landscape maintenance is placed further than 100 m from an access from the road.

C.13. Forward visibility requirements towards gantries shall be checked to ensure no conflict with planting which has to function as a high dense screen, often as a condition of the mitigation commitment made to adjacent residents.

C.14. Where possible access and cables routes to gantries shall be located to avoid essential planting plots. It is recommended that a procedure be adopted that records existing cables and accesses and mitigates damage where existing horticultural commitments have been identified and recorded.

C.15. Where the screening of gantries by vegetation requires a depth of topsoil sufficient to sustain healthy plant growth, the displacement of topsoil for the construction of gantry bases and cabling shall be fully reinstated.

C.16. Records of long term mitigation commitments shall be established in order to ensure that maintenance regimes accord with the preservation of these undertakings.

C.17. Notwithstanding the requirements of C.1 to C.17, gantries designed in accordance with this standard shall possess continuity of structural form in accordance with the TII Publications SCDs for Structural Steelwork, with the aim of minimising overall visual impact. This is irrespective of whether the gantry spans one or more carriageways or slip roads, or carries signal equipment and/or fixed static signs.

Appendix D: Dynamic Analysis for a Dynamically Sensitive Gantry

Introduction

D.1. Gantries that are deemed to be dynamically sensitive structures may be subject to vibration due to aerodynamic effects from environmental wind and/or vehicle buffeting. (See clause 4.21). In addition to inducing forces in excess of those considered in a static analysis at the ultimate limit state, this has three other implications for design.

a) It can have significant torsional action in addition to the flexural action.

b) It can also induce significant cyclic stresses which have to be considered to avoid premature fatigue failures.

c) It can have excessive vibration effects which can either damage equipment or prevent it working effectively.

D.2. Structures shall be assessed to determine if dynamic effects are significant.

D.3. For conventional steel gantries, the span where these effects become significant has been found to be around 20m. However, it may be shorter for more flexible structures, unless there is prior experience of similar structures indicating it is not needed. Dynamic sensitivity of a gantry is to be calculated in accordance with IS EN 1991-1-4 and PD 6688-1-4 except where cross structure wind dynamics is the action being considered.

D.4. Basic design wind speed and factors shall be determined in accordance with IS EN 1991-1-4 and the associated Irish National Annex.

D.5. The structure shall be analysed under the characteristic wind actions and the factors given in Section 3 applied to the effects where wind is the leading action.

D.6. Simple dynamic analyses such as those given in D.12 to D.20 assume that the wind action is not affected by the movement of the structure. In addition, structures shall be checked to ensure that they are not subject to aerodynamic effects.

D.7. In the absence of more realistic approaches, such as using wind tunnel tests or CFD (computational fluid dynamics) susceptibility to aerodynamic effects may be determined in accordance with D.22. Where it is proposed to use these more realistic approaches, this shall be defined in the Technical Acceptance Report and agreed with TII.

D.8. The dynamic effects of ambient wind actions shall be considered for ULS, SLS and Fatigue checks. However, vehicle buffeting need only be considered for fatigue.

D.9. The structure shall be checked in accordance with Section 3 for the maximum ultimate effects from the dynamic analysis.

D.10. The structure shall be checked in accordance with 4.31-4.33 for fatigue using the forces determined from the dynamic analysis.

D.11. In the absence of more rigorous approaches, such as using wind tunnel tests or CFD, the following approach may be adopted for the dynamic analysis.

Conventional Dynamic Analysis

D.12. The main dimensions of the structure will normally be determined first from a static analysis and the following approach may be used for the dynamic analysis.

D.13. Determine the frequencies and modes of vibration from an Eigen value analysis.

D.14. Check if aerodynamic effects are likely to be significant using D.22.

D.15. Generate a wind time-history using the following assumptions:

a) An annual probability of exceedance of Q = 0.02 to calculate the probability factor (corresponding to a mean recurrence interval of 50 years).

b) Direction factors for dynamic and fatigue analyses should be calculated from IS EN 1993-3-1 and the associated Irish National Annex. Wind pressure waves can be considered in angular sectors (e.g. twelve 30o sectors).

D.16. Determine local exterior pressures on the surface for an historical or simulated wind record for a critical time period. Step through the wind speed data to determine a time history of the resulting peak pressures for each pressure measurement location on the gantry surface.

D.17. If, in accordance with clause D.22, aerodynamic effects are significant, modify the amplitude of the time history gust wind actions, where required, according to D.23 to D.27 (and D.28 to D.32 when applicable) to account for aerodynamic characteristics of the gantry structure.

D.18. Check the factored envelope of the effects from this analysis for ultimate strength where wind is the leading action.

D.19. Use the calculated responses to derive the translational acceleration records for different locations on the gantry structure. The acceleration spectrum densities (ASD) should be calculated using Fourier transformation of the time history data.

D.20. Check the stress history from the analysis for fatigue in accordance with 5.18 to 4.21.

Vehicle Buffeting Effects

D.21. Fatigue effects from high vehicle buffeting must be considered. The gantry shall be designed for buffeting actions from high sided vehicles. The actions on the boom structure and attachments shall be taken as given in DN-STR-03018 for cantilever arms and attachments. They may be treated as static actions. Criteria shall be agreed with TII and included in the Technical Acceptance Report prior to its submission.

Aerodynamic Sensitivity

D.22. An initial assessment to IS EN 1991-1-4 should be undertaken to determine if the structure is likely to be sensitive (susceptibility parameter) to aerodynamic excitation. This will be based on the first natural frequency determined from Eigen value analysis. If the structure is found to be sensitive, an aerodynamic assessment is required and the following approach may be used.

D.23. Determine turbulence intensity in accordance with IS EN 1991-1-4.

D.24. Determine a comprehensive set of aerodynamic parameters for the structure using a suitably (i.e. aerodynamically) accurate code calculation, instruments and/or CFD simulation. These parameters include: the static coefficients (lift, moment, drag etc.). These quantities are then used in the analytical simulation.

D.25. Using a detailed numerical (generally finite element) dynamic model of the structure, determine a set of eigenvalues and eigenvectors and a corresponding set of generalised inertias. Generally, this will include at least 15 to 20 modes, but in some cases more may be required.

D.26. Develop an analytical framework and computational aids for synthesising the above data. The interaction of multiple modes should be considered for very sensitive gantry structures.

D.27. Using the results of this analysis, modify the actions used in D.17.

D.28. For long-span gantry structures with bluff type sections in smooth flow, divergent vibration called galloping should also be examined. In turbulent flow, the divergent amplitude vibration, which may turn out to be less divergent but more random, should also be considered. The aerodynamic forces acting on the typical cross section (i.e. circular, rectangular) should be considered in smooth and turbulent flow in order to examine the turbulence effects on galloping stability.

D.29. For flexible long-span gantries, the Power Spectral Density Functions (PSDFs) of the fluctuating lift, at rest, should be calculated to examine the effect of wind. The turbulence effects which may broaden the peaks of the PSDF of the lift should also be considered. For portal gantries susceptible to aerodynamic effects, it may be necessary to take into account the unsteady lift forces which can be measured by the forced oscillation method.

D.30. The vortex-induced vibrations which may also take place in long-span gantry structures at wind speeds considerably lower than their design wind speed should be considered for the stability of gantry structure. An accurate calculation for the amplitude of vortex-induced vibrations should be carried out for the design of long-span gantry structures. The mechanism and countermeasures of the vortex-induced vibrations should be studied in the design.

D.31. The vortex-induced vibrations of vertical bending mode should be examined for flexible portal gantries in smooth flow. In turbulent flow, the reduction of the amplitude of the vortex-induced vibrations can be considered. An example of the application of the approach to bridge structures is given in Davenport, A.G. 1962, "Buffeting of a suspension bridge by storm winds", Proc. ASCE, Vol.88, ST3.

D.32. Where the effects considered in D.28 and D.31 are significant, specialist expertise is likely to be required and the approach used should be defined in the Technical Acceptance Report and agreed with TII. The analysis is also sensitive to the assumed damping. Assumed values should be defined in the Technical Acceptance Report and agreed with TII.

Appendix E: Design of Gantries with permanent Maintenance Access

Introduction

E.1. Gantries supporting Advance Direction Signs (ADS) only shall not be provided with a fixed means of access for inspection and maintenance.

E.2. Gantries supporting Variable Message Sign (VMS) and/or other equipment requiring maintenance, such as ANPR cameras, shall incorporate fixed access. Fixed access shall be in accordance with the TII Publications SCDs for Structural Steelwork,

E.3. The additional design requirements for gantries with fixed access are set out in this Appendix.

General Requirements

E.4. When permanent access is provided, consideration shall be given to the appropriate control of users of such a facility. The potential for damage to the signals and their associated equipment by users shall be addressed.

E.5. Where a fixed walkway or platform is required to enable maintenance of signs, signal equipment and/or lighting, to be carried out, the following requirements shall be met:

a) The minimum clear width of the walkway, excluding cable trays and/or working space to maintain equipment, shall be 0.6 m. On gantries where several sets of equipment may need to be maintained simultaneously, the clear width of the walkway/platform including cable trays shall be not less than 1.5m.

b) An overhead clearance of not less than 2.1m desirable, 1.5m absolute minimum, shall be provided. Wherever the headroom is less than 2.1m, secured protective head gear must be worn by all operatives mounting the gantry and a notice shall be provided indicating that protective head gear shall be worn.

c) The walkway surface shall be nominally horizontal. Solid walkways shall be sufficiently inclined to drain surface water.

d) Unless over a horizontal structural member or within an enclosure, walkways should preferably be of the open mesh type with the minimum possible solidity compatible with openings which will prevent the passing of a ball 5 mm in diameter.

e) The surface of all walkways on gantries shall have a non-slip finish. The surfacing of solid walkways, when new, shall have a slip resistant finish which has a slip resistance against rubber, leather or composite sole material of not less than 65 units under wet conditions or equivalent. The slip resistant finish shall have an effective life of at least ten years and shall retain a slip resistance of not less than 45 units under wet conditions or equivalent throughout this period. The slip resistance of solid surfacings should be checked by the portable skid resistance pendulum tester developed by the Transport Research Laboratory or equivalent. A suitable in situ finish on solid surfaces may be obtained by over sprinkling the surface with calcined bauxite flints with a particle size in the range of 0.17 to 0.50 mm or other materials with an equivalent performance.

f) Access facilities shall be designed so as to discourage the use of cable trays as walkways.

g) Fixed walkways and platforms may be enclosed as agreed with TII and maintaining authority.

E.6. Whilst open mesh walkways may reduce the vertical effects of wind actions, there is still the risk of small objects falling onto the carriageway below; in addition it is uncomfortable to work on. Therefore situations where solid walkways are preferred may arise. The selection of whether an open mesh or solid walkway is to be provided should be made on a scheme specific basis with the Designer justifying the selection in the Technical Acceptance Report submitted to TII.

Mitigation of Vandalism and Theft

E.7. Where it is recognised that gantries are generally at risk from unauthorised entry, particularly where the supports are adjacent to retaining walls, or the possibility exists that the enforcement equipment might be the target of vandalism, a risk assessment shall be undertaken. Mesh infill must be fitted around all access ladder and a lockable door must be fitted at the ladder base to prevent illegal entry.

E.8. The methods adopted to secure gantries include one or more of the following:

a) Install gates or doors across the bottom of the safety cage on the access ladders

b) Stop the access ladder short of the ground to which it is necessary to attach a temporary ladder brought to site by the operative

c) Provide a plank or sheet of metal that can be installed and locked across the rungs of the lower part of the ladder

Handrails

E.9. A safety handrail 1.10m high above the walkway or other accessible horizontal surface shall be provided around all walkway surfaces that are not protected by other means of similar height.

E.10. All edges of the walkway shall be provided with the minimum of a solid up-stand at least 150 mm high in the plane of the handrail. To prevent any items falling onto the carriageway those parts of the walkway handrail over the carriageway and at least 1.5m beyond the back of the hard-shoulder/ strip or verge must be infilled with either solid plate or with mesh with openings which will prevent the passing of a ball 5mm in diameter, or a combination of both.

E.11. Handrails and infill panels must be in accordance with BS 6180 ‘Protective barriers in and about buildings’. The category must be as defined in Table 1 of the BS.

Ladders

E.12. Where access ladders are required, they must comply with the general requirements of BS 4211 ‘Ladders for permanent access’; Class B.

E.13. Where the public has pedestrian access to the road upon which the gantry is located consideration must be given to the provision of a gate across the bottom of the ladder enclosure or hinged flap with a latch capable of accepting a padlock and the lower length of the enclosure made un-climbable, such as by the provision of mesh infill around at least the lower 2 metres of the ladder enclosure and any ladder supports.

E.15. Experience to date in the UK suggests that gantries on motorways are not at risk from unauthorised access, whereas on public roads the risk may be dependent on the locality. Gates or hinged flaps are a possible hindrance to authorised personnel but must be fitted where experience indicates they are necessary.

Lifting Equipment

E.16. Where lifting equipment is specified, lifting points and davits shall be provided to carry a safe working load of 100kg (1kN). A permanently fixed metal plate or inscription, stating the maximum safe working load, in characters not less than 10mm high, shall be positioned either adjacent to the hook or on the davit. All lifting equipment shall be tested in accordance with the current requirements of the Health and Safety Authority. Lifting equipment shall be positioned over the back of the hard shoulder or hard strip, unless otherwise agreed.

Variable Actions (Imposed Loading)

E.17. Guidance on typical imposed loading to be considered for maintenance access is set out in clauses E.17 and E.18. This loading shall be recorded in the Technical Acceptance Report and submitted to TII for approval.

E.18. On gantries of the portal and cantilever types, characteristic imposed load shall consist of at least 0.5 kN per metre run of the useable length of walkway. Cantilevers with an outreach of less than 7.5m, shall be checked for characteristic imposed load consisting of two 1.0 kN point actions acting vertically downwards spaced 0.5m apart and positioned at any point on the walkway or maintenance platform.

E.19. Walkways and maintenance platforms shall be designed for the local effects of two 1.0 kN characteristic point actions acting vertically downwards spaced at 0.5m apart and applied at any point.

E.20. Combinations of actions are to be derived in accordance with IS EN 1990. The relevant partial factors and combination factors are given in Table NA.7 and NA.8 of the Irish National Annex to IS EN 1990.

E.21. Where permanent access is provided, a permanently fixed metal plate or inscription, stating the maximum number of persons and weight of equipment, in characters not less than 10mm high, shall be positioned where it can be clearly read from the usual point of access.

Appendix F: Table of Gantry Features

This table may be useful for the Designer to assist in schemes requiring the provision of gantries.

Item No	Feature	Reference	Requirement
1	Gantry type	2.1	Standard / ITS
2	Function	1.3	Support signs/signals/other equipment
3	Span arrangement	3.7, 3.9	Cantilever/single portal/twin portal/other
4	Spans		Specify individual/range (m)
5	Over span	C.10 (f), (g)	Yes/No
6	Location	C.3 to C.7	Specify/wind speed for design
7	Signs	3.17, B.9, B.10	None/specify No ht x w (m)
8	Illumination of signs	B.11 to B.13	Specify type: none/external/internal/LED
9	Retroreflective sheeting		Specify type, none/type
10	Variable message sign	B.14	None/rotating prism/other
11	Signals	B.18	None/No & position of MS/EMS/EMI/CMI
12	CCTV	B.19, B.20	None/location
13	Mounting for signal control equipment	B.21, B.23	None/location & method
14	Other equipment	B.23, B.26	None/specify
15	Power distribution	B.25	None/location
16	Lifting facilities	E.15	None/location
17	Other parties equipment	B.26	None/specify
18	Ground works for control/power cabinets/ lay-by	B.27, CB.28	None/provision
19	Design working life	3.2, 3.3	No. of years
20	Flexibility in future use	B.16, B.22 , B.23	Capable of being re-configured and/or re-positioned
21	On elevated structures	3.21	No/details
22	Colour of structure	E.11 to E.13	Specify
23	Restraint systems	6.13	Yes/No/Dependent on set out (Figure 2a)
24	Protection of Steelwork Against Corrosion	TII Publications Specification and SCDs for the Protection of Steelwork Against Corrosion	Specify
25	Other		Specify any other requirement

Bonneagar Iompair Éireann
Transport Infrastructure Ireland

Ionad Ghnó Gheata na Páirce,
Stráid Gheata na Páirce,
Baile Átha Cliath 8, D08 DK10, Éire

www.tii.ie

+353 (01) 646 3600

Parkgate Business Centre,
Parkgate Street,
Dublin 8, D08 DK10, Ireland

info@tii.ie

+353 (01) 646 3601